ROSEVILLE

REQUEST FOR COUNCIL ACTION

Date: 7/10/2017
Item No.: 7.c

Department Approval | City Manager Approval

Item Description: Consider Advertising for Bids for the Cedarholm Community Building

BACKGROUND

After more than a yearlong community input process and final report, on January 9, 2017, the City entered into an agreement with Hagen, Christensen & McILwain (HCM) Architects for preliminary design services to replace the Cedarholm Community Building.

At the March 20, 2017 City Council Work Session, further direction was provided to: 1) pursue a larger community building with seating up to one hundred 2) establish clearer costs to better determine funding sources 3) no longer consider the Historical Society as part of this project but rather that it would be a better fit in the City Hall Campus area, and 4) seek a proposal to complete final building plans and specifications.

On April 10, 2017 the City Council authorized an agreement with Hagen, Christensen & McILwain (HCM) Architects for further design services that included Design Development (Task One) and Construction Documents (Task Two) for the replacement of the Cedarholm Community Building with progress check in.

On April 24, 2017 HCM Architects provided a progress report on the Design Development phase and sought input on the site plan, floor plan and building image options #1, #2A and #2B. There was general consensus that it was moving in the right direction with image option #2B preferred by the City Council. Direction to the architects was to focus on option #2B and proceed.

On June 5, 2017, a final Design Development (Task One) review was provided to the City Council and input was received. The highlights included an aerial site plan, architectural site plan, building image rendition, building elevation plan, building floor plan and cart storage area plan. Comments were received and direction to the architects was to proceed with Construction Documents (Task Two).

Tonight is a final review after the Construction Documents (Task Two) and consideration to advertise for bids for the project. In your packet is a specifications table of contents, architectural construction document set, draft request for bids, memo from HCM on sustainable features and a memo from staff on the basement consideration A complete bid set will be available in the Parks and Recreation Office. Staff and HCM Architects will be at your meeting to review.
The history of refining cost estimates as a part of the work so far includes the following:

	3/20/17	6/5/17	7/10/17
Cedarholm Community Building (includes site work, parking lot, cart storage and green relocation)	$ 2,350,000	$ 2,029,000	$2,029,000
Furniture and equipment (kitchen and other)	$ TBD	$ TBD	$ 200,000
Technology/security	$ TBD	$ TBD	$ 40,000
Planning and Management	$ 285,000	$ 285,000	$ 285,000
Temporary Quarters	n/a	n/a	$ 30,000
Contingency (5% of construction)	$ TBD	$ TBD	$ 101,450
Total Community Building and Cart Storage	$ 2,635,000	$ 2,314,000	$2,685,450

Soils have been tested, surveys have been conducted, and estimates for furnishings including kitchen equipment, tables/chairs and technology/security requirements are being refined.

Other topics of discussion and consideration include the following:

1) Basement
   The possibility of adding a basement to the Cedarholm Community Building was discussed. Staff and architects looked into it further. The cost of adding it as an alternate to the Construction Documents was $24,000. At this point, it is no longer being considered and not included in the Plans and Specifications. Please see attached previous memo to the City Council and City Manager from staff.

2) Sustainable Design Features
   Based upon previous City Council discussions, the Cedarholm Community Building has many sustainable design features. Please see attached summary memo from HCM Architects.

   Bird friendly glass was suggested several times and will be included as a bid alternate in the plan set. Preliminary information suggests that this special type of glass could be as much as 2 times the cost.

3) Temporary Operating Quarters during Construction
   Temporary operating quarters will be needed for approximately 7 months (September – November of 2017 and March through June of 2018) while the new Cedarholm Community Building is being constructed. Following are cost estimates at this time including:

Trailer and temporary electrical hook up	$ 15,000
Portable restrooms and washing stations	$ 3,000
Temporary communications/safety	$ TBD
Total	$ 18,000

4) Annual Maintenance and Operation Budget Projections

	2018	2019	2020
Personal Services	$185,990	$191,970	$196,625
Supplies and Materials	$ 23,600	$ 32,770	$ 33,600
Other Services and Charges	$ 43,675	$ 62,350	$ 63,575
Total Community Building Operations	$253,265	$287,090	$293,800
Total Grounds Maintenance	$145,000	$206,000	$208,000
Total Operations and Maintenance	$398,265	$493,090	$501,800
Total Revenue Projections	$366,450	$429,675	$445,000
Difference of Expense and Revenue	($31,815)	($63,415)	($56,800)
*Administrative and Depreciation	$36,500	$36,500	$ 36,500
Total w/o Administrative and Depreciation	$ 4,685	($26,915)	($20,300)

Notes:

- Currently, there are 1.75 FTE employees at Cedarholm Golf Course. Anticipating the year round and increased use of the Community Building, the projections include the necessity to increase FTE staffing to 2.0. Specifically the existing ¾ time position is suggested to be increased to full time. This was a full time position until 2009. The need is anticipated as soon as the replaced facility becomes operational.

- * Because a decision has not been made on the Enterprise Status, the expense budget includes Administrative charges of $20,000 and Depreciation charges of $16,500 for a total of $36,500. These funds are paid to city accounts. The forecast above shows the budget with and without these charges.

- Budget projections are realistic, conservative, include community use features and custodial services and are consistent with other Roseville facility and use rates.

5) Finalize Funding Mechanism
The final funding mechanism for the construction related expenses has not yet been finalized by the City Council. It is important that this be considered as part of your discussion either July 10 or at a future date. However, at the consideration of a project in August, a funding source should also be identified.

Status Summary and Next Steps
Design Development (Task One) and Construction Documents (Task Two) are more than 95%

complete and are ready to advertise for bids. It is expected that in August, bids will have been received and a project will be brought back to you for consideration at which time a final funding source should also be identified.

Timeframe

The following is a review of the overall timeframe:

- June 5, 2017 – Design Development (Task One) update
- July 10, 2017 – Construction Documents (Task Two) update
- July 10, 2017 – Request for City Council Action to advertise for proposals
- July 11, 2017 – Begin process for advertising for Bids
- August 14 or August 28, 2017 - Consider authorizing project and finalize funding mechanism. Timing is a challenge here because the City Council does not meet on August 21, 2017. Ideally consideration for a project award would occur in mid August with a start date late August. Although time will be needed to sort through the proposals to be comfortable with a recommendation.

POLICY OBJECTIVE

The process for involving community members and City Council as necessary to review public facility improvements is consistent with past City efforts.

FINANCIAL IMPACTS

Costs related to progress check in is professional consultant time. A final funding source for the project is yet to be finalized and should be done at the time or prior to the City Council consideration for a project in August of 2017.

STAFF RECOMMENDATION

As a result of the community process and work completed to date, staff recommends the advertisement for bids for the Cedarholm Community Building replacement project.

REQUESTED COUNCIL ACTION

A motion to authorize advertising for bids to construct a Cedarholm Community Building and a Golf Cart Storage area as presented.

Prepared by: Lonnie Brokke, Director of Parks and Recreation
Jill Anfang, Assistant Director of Parks and Recreation

Attachment: A. Specifications Table of Contents
B. Architectural Bid Set
C. Draft Request for Bids
D. Memo from HCM on Sustainable Features
E. Memo from Staff on Basement Consideration

SECTION 00 0110

TABLE OF CONTENTS

COVER PAGE
CERTIFICATIONS
TABLE OF CONTENTS

DIVISION 0 - BIDDING REQUIREMENTS

	City of Roseville Advertisement for Bid
	Bid Form
	Instruction to Bidders
	General Requirements
	Contract Form
	Storm Water Pollution Prevention Plan
00 3132	Geotechnical Data

DIVISION 01 - GENERAL REQUIREMENTS

01 1000	Summary
01 2300	Alternates
01 2501	Substitution Request Form
01 2600	Contract Modification Procedures
01 2900	Payment Procedures
01 3100	Project Management and Coordination
01 3200	Construction Progress Documentation
01 3300	Submittal Procedures
01 4000	Quality Requirements
01 4200	References
01 4530	Structural Tests and Special Inspections
	- Structural Tests and Special Inspections Schedule
	- Acknowledgements
01 5000	Temporary Facilities and Controls
01 6000	Product Requirements
01 7300	Execution
01 7419	Construction Waste Management and Disposal
01 7700	Closeout Procedures
01 7823	Operation and Maintenance Data
01 7839	Project Record Documents
01 7900	Demonstration and Training

DIVISION 03 - CONCRETE

03 3000	Cast-In-Place Concrete

DIVISION 04 – MASONRY

04 2000	Unit Masonry
04 4200	Stone Masonry

DIVISION 05 – METALS

05 1200	Structural Steel Framing
05 5000	Metal Fabrication

DIVISION 06 – WOOD, PLASTICS AND COMPOSITES
06 1000 Rough Carpentry
06 1600 Sheathing
06 1753 Shop-Fabricated Wood Trusses
06 2013 Exterior Finish Carpentry
06 2023 Interior Finish Carpentry
06 4116 Plastic-Laminate-Faced Architectural Cabinets

DIVISION 07 - THERMAL AND MOISTURE CONTROL
07 2100 Thermal Insulation
07 2500 Weather Barriers
07 3113 Asphalt Shingles
074600 Rain Screen Siding System
07 4646 Fiber-Cement Siding
07 5323 Ethylene-Propylene-Diene-Monomer (EDPM) Roofing
07 6200 Sheet Metal Flashing and Trim
07 9200 Joint Sealants

DIVISION 08 – OPENINGS
08 1113 Hollow Metal Doors and Frames
08 1433 Stile and Rail Wood Doors
08 3113 Access Doors and Frames
084100 Aluminum Entrances and Framing
084226 All Glass Entrances
08 5200 Clad Wood Windows
08 7100 Door Hardware
088000 Glazing

DIVISION 09 - FINISHES
09 2000 Gypsum Board
09 3000 Tile
095446 Fabric Wrapped Panels
09 6513 Resilient Base and Accessories
09 6519 Resilient Tile Flooring
09 6813 Tile Carpeting
09 7750 Fiberglas Reinforced Panels
09 9100 Painting
09 9300 Wood Stains and Transparent Finishes

DIVISION 10 – SPECIALTIES
10 1423 Signage
10 2113.19 Plastic Toilet Compartments
10 2800 Toilet, Bath, and Laundry Accessories
10 3050 Gas-Fired Fireplace
10 4416 Fire Extinguishers

DIVISION 11 – EQUIPMENT - NOT USED

DIVISION 12 – FURNISHINGS
12 3623.13 Plastic-Laminate-Clad Countertops
12 3661 Simulated Stone Countertops

DIVISION 13 – SPECIAL CONSTRUCTION - NOT USED

DIVISION 14 – CONVEYING SYSTEMS - NOT USED

DIVISION 22 – MECHANICAL

22 0500 Common Work Results For Plumbing
22 0519 Meters and Gages for Plumbing Piping
22 0523 General-Duty Valves for Plumbing Piping
22 0529 Hangers and Supports for Plumbing Piping and Equipment
22 0553 Identification for Plumbing Piping and Equipment
22 0700 Plumbing Insulation
22 1116 Domestic Water Piping
22 1119 Domestic Water Piping Specialties
22 1316 Sanitary Waste and Vent Piping
22 1319 Sanitary Waste Piping Specialties
22 3300 Electric, Domestic-Water Heaters
22 4000 Plumbing Fixtures

DIVISION 23 – HEATING, VENTILATING AND AIR CONDITIONING

23 0500 Common Work Results for HVAC
23 0513 Common Motor Requirements for HVAC Equipment
23 0553 Identification for HVAC Piping and Equipment
23 0593 Testing, Adjusting, and Balancing For HVAC
23 0700 HVAC Insulation
23 0900 Instrumentation and Control for HVAC
23 0993 Sequence of Operations for HVAC Controls
23 1123 Facility Natural-Gas Piping
23 3113 Metal Ducts
23 3300 Air Duct Accessories
23 3423 HVAC Power Ventilators
23 3713 Diffusers, Registers, and Grilles
23 3724 Louvers
23 5400 Furnaces
23 8239 Electric Heaters

DIVISION 26 – ELECTRICAL

26 0500 General Requirements
26 0519 Low-Voltage Electrical Power Conductors and Cables
26 0526 Grounding and Bonding for Electrical Systems
26 0529 Hangers and Supports for Electrical Systems
26 0533 Raceway and Boxes for Electrical Systems
26 0565 Supplemental Equipment
26 0570 Electrical Service Entrance
26 0575 Electrical Related Work
26 0636 Manual Dimming Controls
26 2200 Low Voltage Transformers
26 2416 Panelboards
26 2726 Wiring Devices
26 2813 Fuses
26 2915 Circuit and Motor Disconnects

26 5100 Lighting
26 5200 Emergency Lighting
26 5300 Exit Signs

DIVISION 28 – ELECTRONIC SAFETY AND SECUITY
28 3111 Digital Addressable Fire Alarm System

END OF SECTION

Attachment B

Roseville Parks and Recreation

CEDARHOLM COMMUNITY BUILDING

2323 Hamline Avenue N.
Roseville, Minnesota 55113

BID SET - July 10, 2017

1 CONCEPT RENDERING – NORTH ELEVATION
NOT TO SCALE

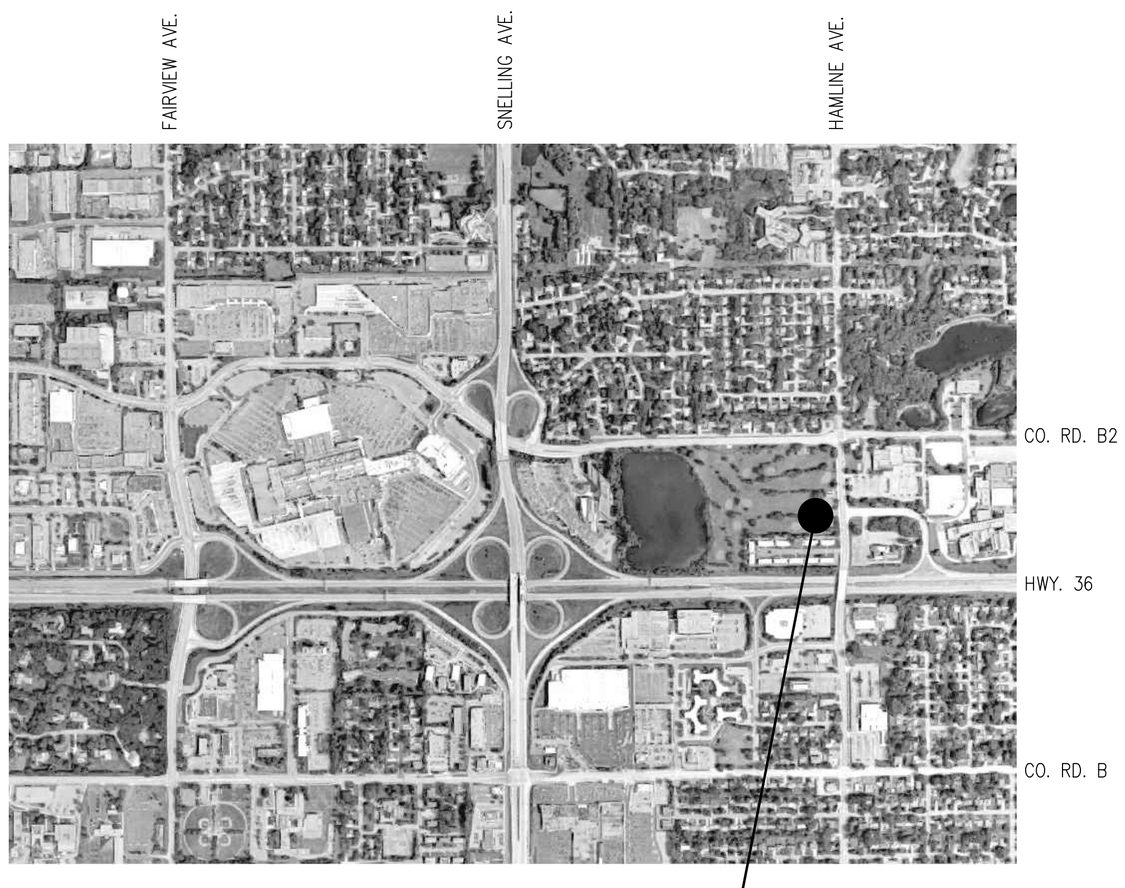

2 SITE LOCATION MAP
NOT TO SCALE

NORTH

SPACES LEGEND

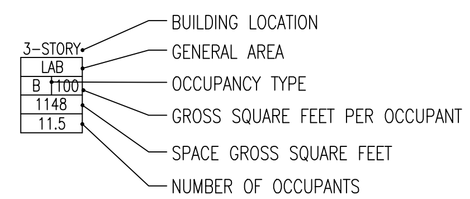

EGRESS LEGEND

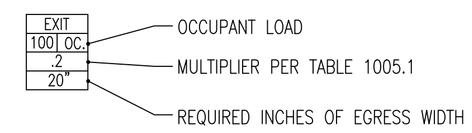

TOTAL OCCUPANTS: XXX

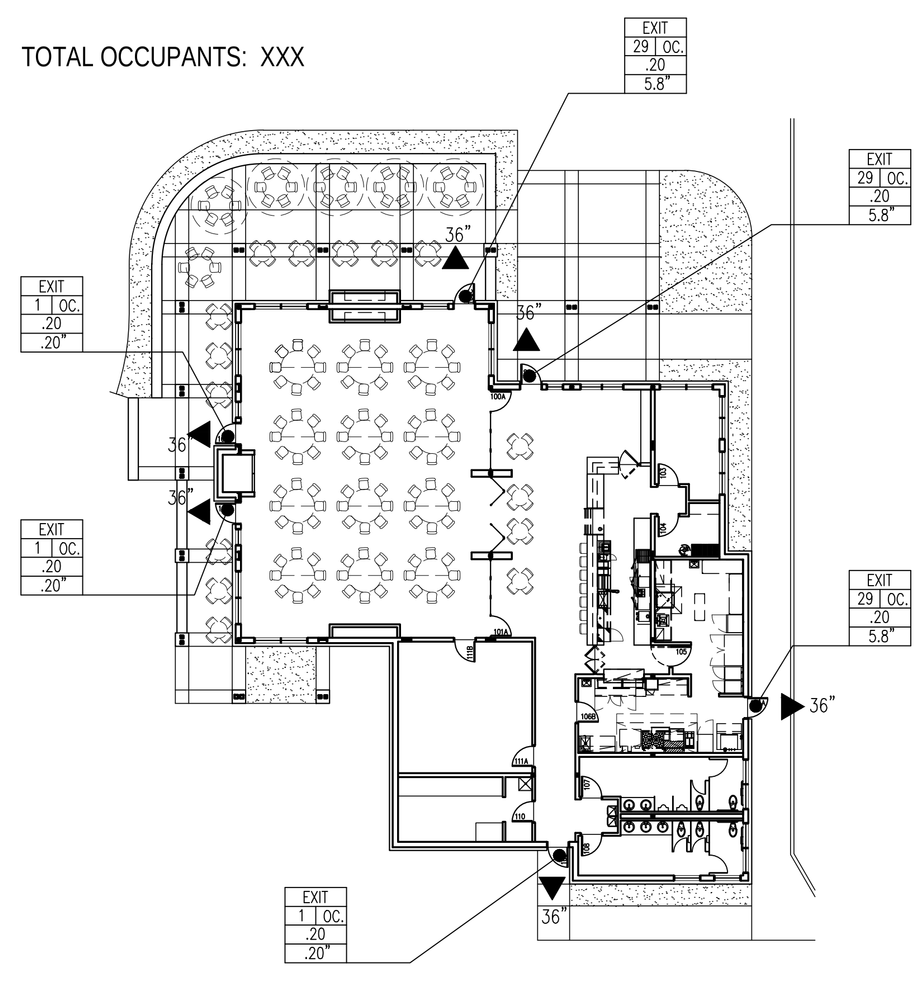

3 CODE REVIEW PLAN
1/16" = 1'-0"

NORTH

CODE REVIEW

DRAWING INDEX

GENERAL
a0.0 TITLE SHEET

CIVIL
c1.0 EXISTING CONDITIONS/REMOVALS PLAN
c2.0 OVERALL LAYOUT PLAN
c2.0(3) OVERALL LAYOUT PLAN
c3.0 OVERALL GRADING & UTILITIES PLAN
c4.0 OVERALL LAYOUT PLAN
c5.0 MISCELLANEOUS DETAILS
c5.1 MISCELLANEOUS DETAILS

ARCHITECTURAL
d2.0 DEMOLITION PLAN
a2.0 CART STORAGE BUILDING
a2.1 FLOOR PLAN
a2.1i FINISH FLOOR PLAN
a2.1fe FURNITURE FLOOR PLAN
a2.2 ROOF PLAN
a3.1 EXTERIOR ELEVATIONS
a4.1 BUILDING SECTIONS
a4.2 BUILDING SECTIONS
a4.2 WALL SECTIONS
a4.3 WALL SECTIONS
a5.1 EXTERIOR DETAILS
a5.2 EXTERIOR DETAILS
a7.1 ENLARGED PLANS, ELEVATIONS, DETAILS
a7.2 INTERIOR ELEVATIONS AND DETAILS
a7.3 INTERIOR ELEVATIONS AND DETAILS
a8.1 DOOR AND WINDOW SCHEDULE, TYPES
a8.2 INTERIOR DETAILS
a9.1 REFLECTED CEILING PLAN

STRUCTURAL
s1.1 STRUCTURAL NOTES & SPECIAL INSPECTIONS
s2.1 FOOTING & FOUNDATION PLAN
s2.2 LOW ROOF PLAN
s2.3 HIGH ROOF PLAN
s3.1 FOUNDATION SECTIONS & DETAILS
s4.1 ROOF FRAMING SECTIONS & DETAILS

MECHANICAL
m0.0 MECHANICAL TITLE SHEET
m0.1 MECHANICAL SITE PLAN
m1.0 PLUMBING PLAN
m2.0 HVAC PLAN
m3.0 MECHANICAL DETAILS
m4.0 MECHANICAL SCHEDULES

ELECTRICAL
e0.0 ELECTRICAL TITLE SHEET
e0.1 ELECTRICAL SITE PLAN
e1.0 LIGHTING PLAN
e2.0 POWER & SIGNAL PLAN
e2.1 ENLARGED KITCHEN ELECTRICAL PLAN
e3.0 SINGLE LINE DIAGRAM & SCHEDULES
e4.0 ELECTRICAL SCHEDULES

FOOD SERVICE
fs1.0 FOODSERVICE FIXTURE PLAN

Comm. No.
1758

ISSUE DATE
06/06/2017 – DESIGN DEVELOPMENT SET
07/10/2017 – BID SET

Foodservice Designer
premier
Commercial Design & Logistics, Planning
2320 Northeast Tomas, Minneapolis, MN 55418
ph: 763 544-0100 fax: 763 544-1940
premierdesig.com

Mechanical and Electrical Engineers
emanuelson-podas
consulting engineers
10401 Bren Road East
Minnetonka, MN
55343
ph: 952–930–0050
fax: 952–930–0777
www.epinc.net

Structural Engineer
Mattson Macdonald Young structural engineers
Bassett Creek Business Center
901 North 3rd Street, Suite 100
Minneapolis, MN 55401
612-827-7925 voice
612-827-0805 fax

Civil Engineer & Landscape Architect
SRF Consulting Group, Inc.

Owner
ROSEVILLE

Owner
City of Roseville
Project
Cedarholm Community Building
Title
Title Sheet

I hereby certify that this drawing was prepared by me or under my direct supervision and that I am a duly licensed architect under the laws of the State of Minnesota.

By:

Title: Architect Date:

Registration Number:

Drawing No.
a0.0

HAGEN, CHRISTENSEN & McILWAIN
ARCHITECTS
4201 CEDAR AVENUE SO. • MINNEAPOLIS, MN 55407
TEL (612)804-1332 • FAX (612)804-7366

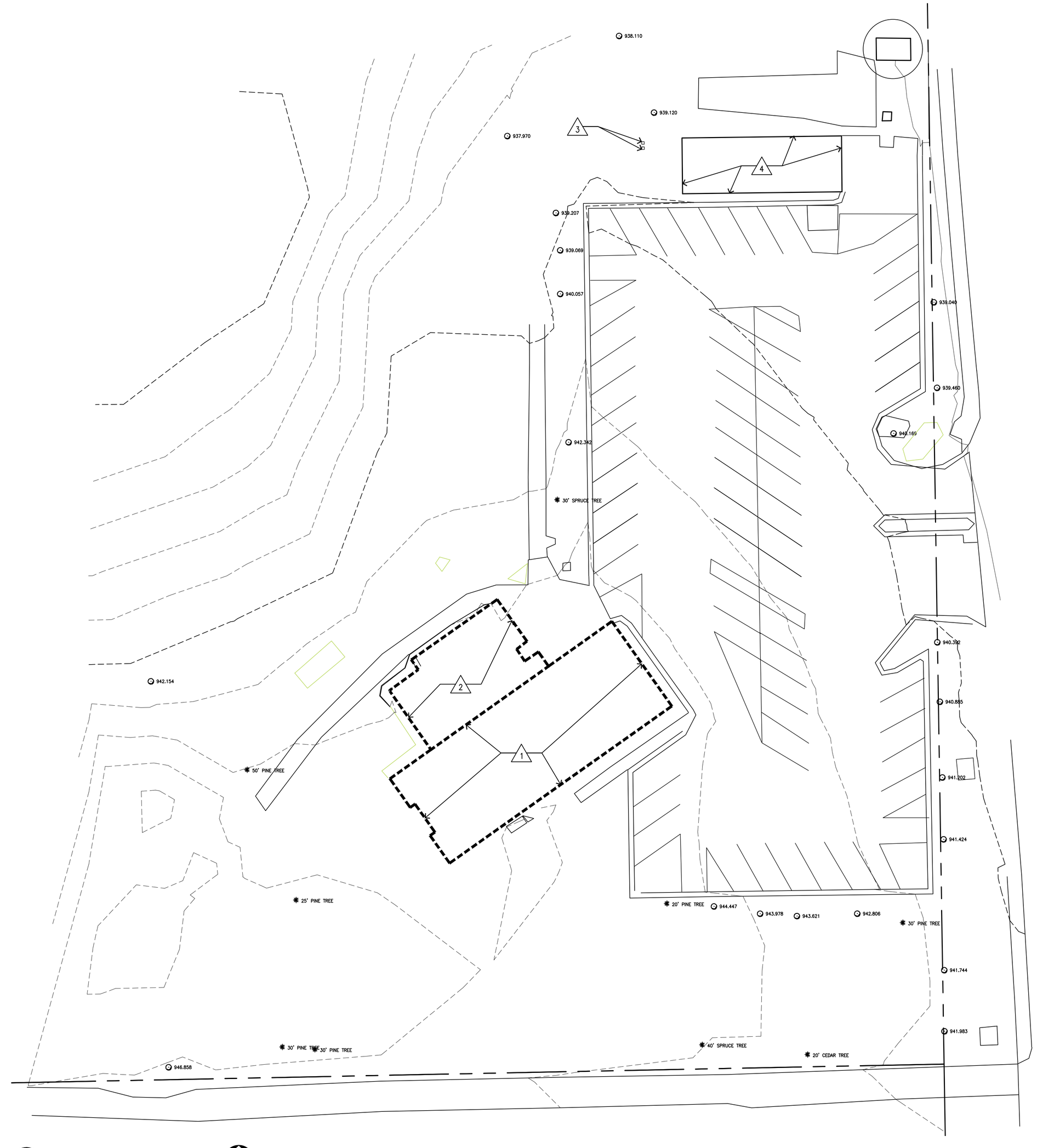

1 DEMOLITION PLAN
1" = 20'-0"

NORTH

GENERAL DEMOLITION NOTES

1. SALVAGE UTILITIES AS REQ'D – SEE CIVIL, MECH., & ELEC.
2. FOR BITUMINOUS AND CONC. CURB REMOVAL, SEE CIVIL
3. FOR CONC. REMOVAL, SEE CIVIL
4. FOR TREE AND LANDSCAPE REMOVAL, SEE CIVIL

DEMOLITION PLAN KEY NOTES

1. REMOVE EXISTING 1-STORY, WOOD-FRAMED, ASPHALT SHINGLED BUILDING IN ITS ENTIRETY (APPROX. 3,260 SF), INCLUDING FOUNDATION ASSEMBLY
2. REMOVE EXISTING WOOD DECK, RAMP, AND ASSOCIATED HANDRAILS/GUARDRAIL ASSEMBLIES IN THEIR ENTIRETY (APPROX. 1,300 SF)
3. RELOCATE ELECTRICAL PEDESTAL AS REQ'D FOR NEW CART SHED
4. EXISTING BUILDING TO REMAIN

Comm. No.
1758

ISSUE DATE
06/06/2017 – DESIGN DEVELOPMENT SET
07/10/2017 – BID SET

Foodservice Designer
premier
Foodservice Design ■ Equipment Rentals
7025 Northland Terrace, Minneapolis, MN 55428
ph: 763-544-0800 ■ fax: 763-544-7946
premierinc.com

Mechanical and Electrical Engineers
emanuelson-podas
consulting engineers
10401 Bren Road East
Minnetonka, MN
55343
ph: 952-930-0050
fax: 952-930-0777
www.epinc.net

Structural Engineer
Mattson Macdonald Young structural engineers
Bassett Creek Business Center
901 North 3rd Street, Suite 100
Minneapolis, MN 55401
612-827-7825 voice
612-827-0805 fax

Civil Engineer & Landscape Architect
SRF Consulting Group, Inc.

Owner
ROSEVILLE

Owner
City of Roseville
Project
Cedarholm Community Building
Title
Demolition Plan

I hereby certify that this drawing was prepared by me or under my direct supervision and that I am a duly licensed architect under the laws of the State of Minnesota.

By:

Title: Architect Date:

Registration Number:

Drawing No.
d2.0

HAGEN, CHRISTENSEN & MCILWAIN
ARCHITECTS
4201 CEDAR AVENUE SO. • MINNEAPOLIS, MN 55407
TEL. (612)824-1332 • FAX (612)824-7366

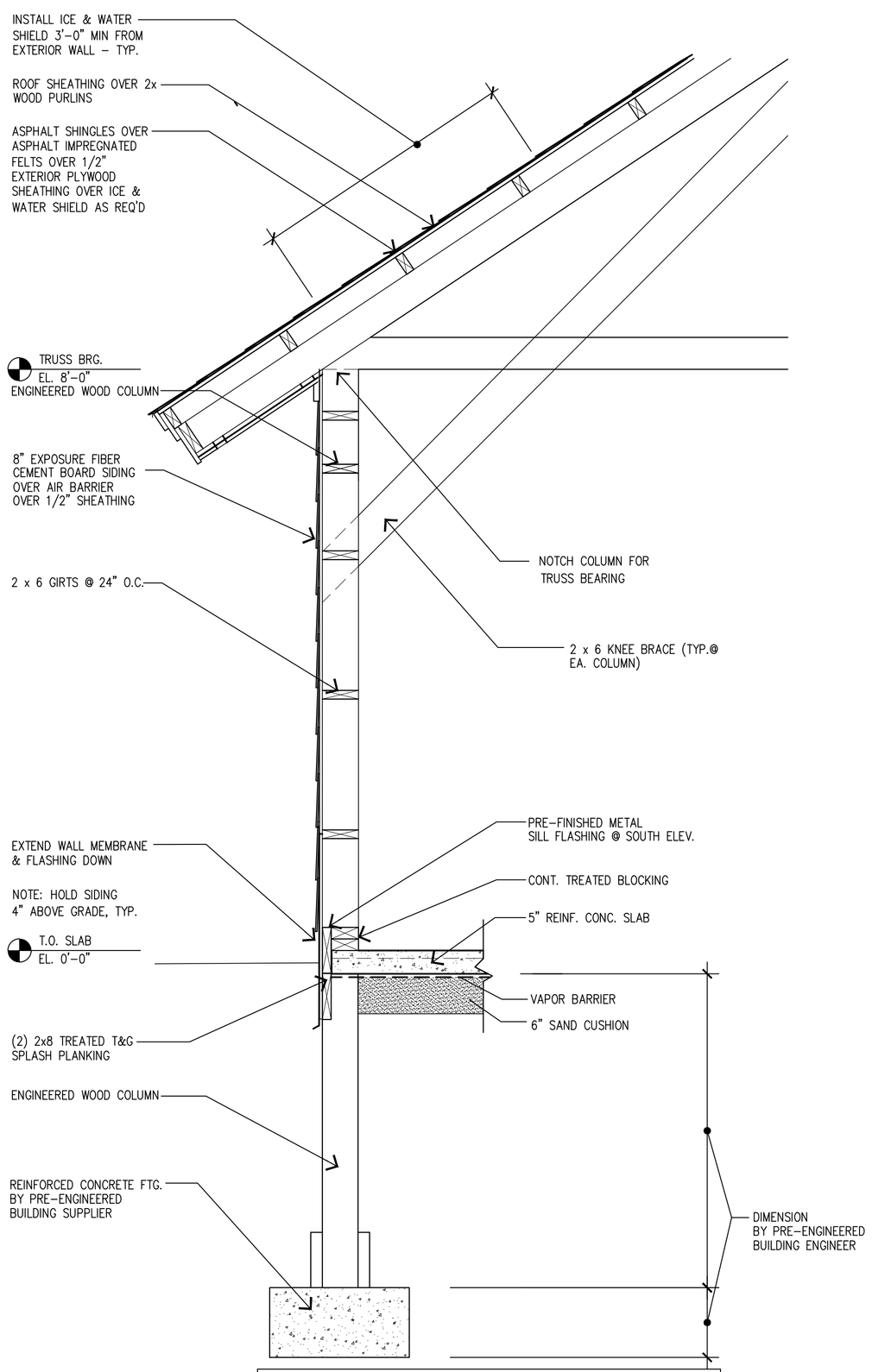

NOTE: 1. AIR BARRIER TO BE HARDIE WRAP PRO FLASHING INSTALLED PER MANUFACTURER'S INSTALLATION REQUIREMENTS.
2. CEMENT BOARD SIDING WITH BLIND NAIL INSTALLATION PER MANUFACTURER'S TECHNICAL BULLETIN INSTRUCTIONS – PAINT.

5 TYP. WALL SECTION
3/4"=1'-0"

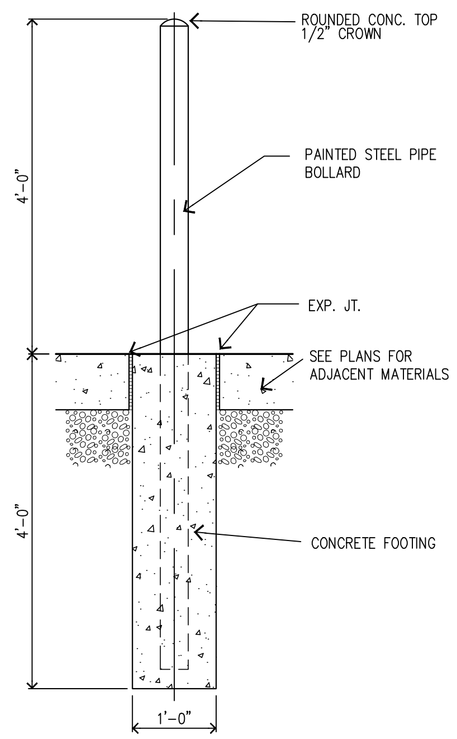

4 BOLLARD DETAIL
3/4"=1'

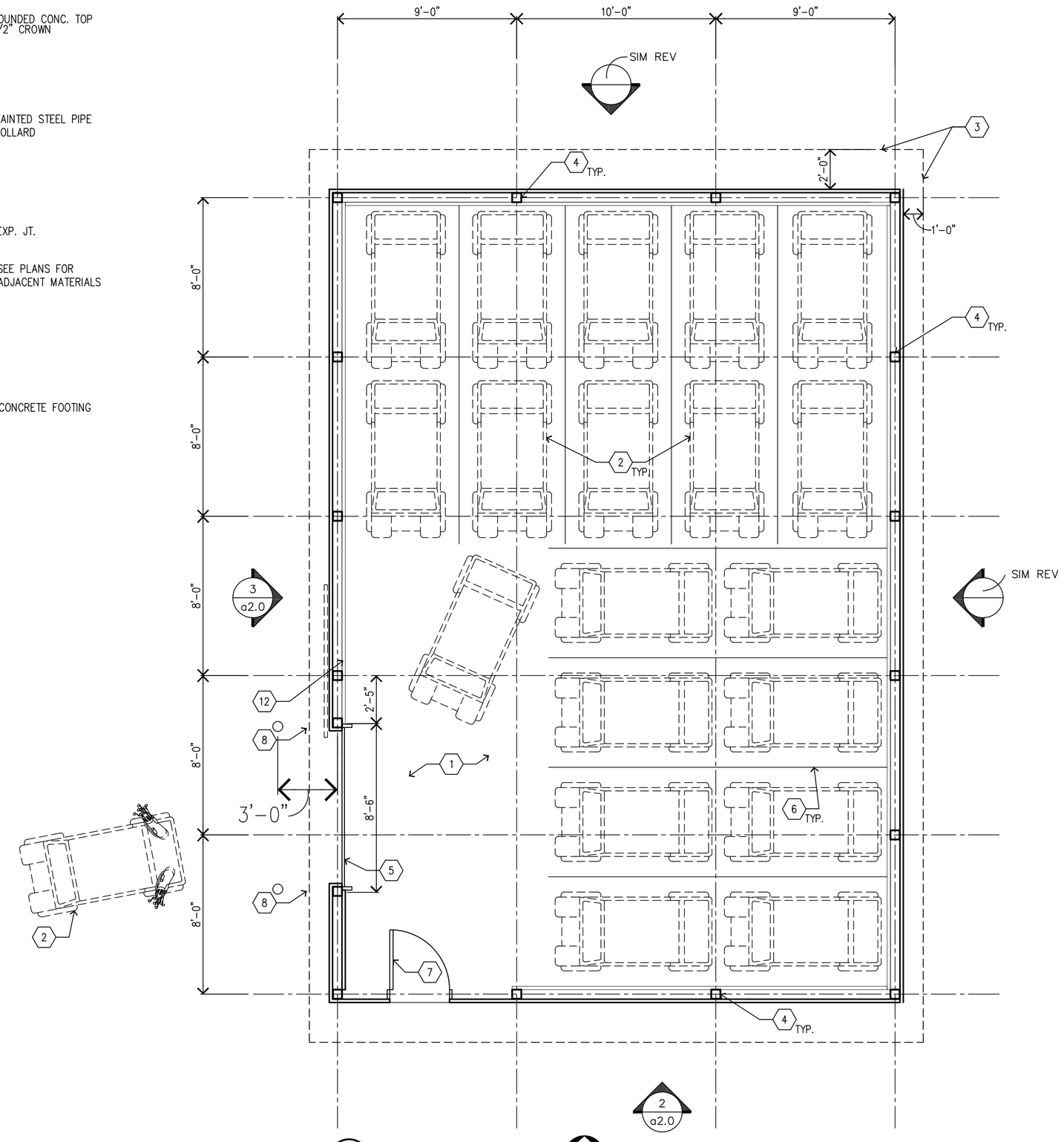

1 CART SHED PLAN
1/4"=1'-0"

NORTH

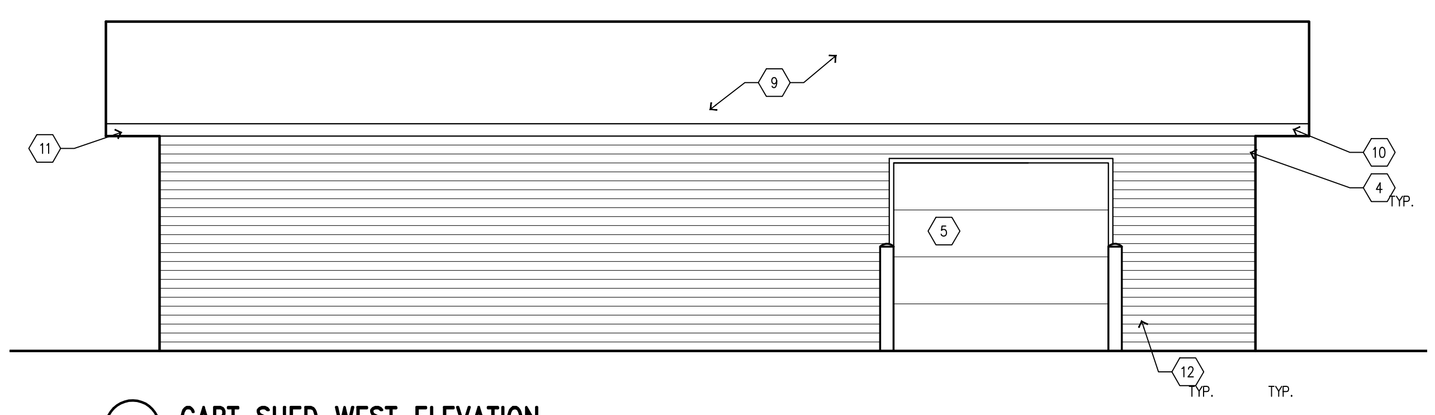

3 CART SHED WEST ELEVATION
1/4"=1'-0"

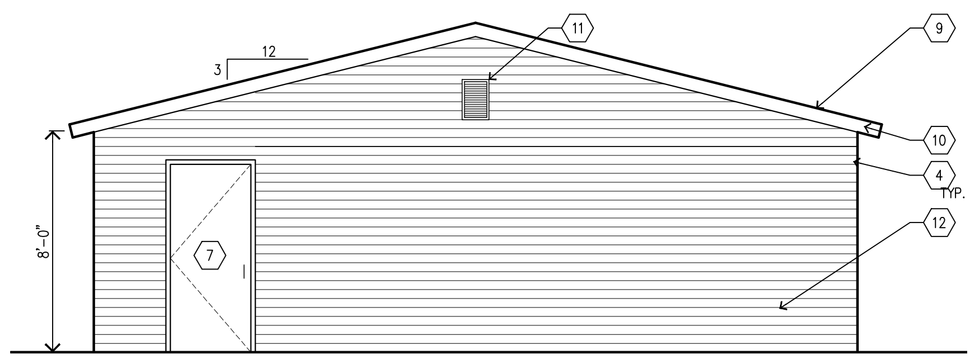

2 CART SHED SOUTH ELEVATION
1/4"=1'-0"

CART SHED GENERAL NOTES

1. ALL DIMENSIONS TO CENTER OF COLUMN U.N.O.
2. PAINT ALL H.M. DOOR FRAMES
3. SEE CIVIL, STRUCT., MECH., & ELEC. DRAWINGS FOR FURTHER INFORMATION

CART SHED KEY NOTES

1. CONCRETE FLOOR SLAB, 4" THICK, TYP. SEE STRUCTURAL
2. GOLF CART PROVIDED BY OWNER
3. LINE OF ROOF OVERHANG ABOVE
4. WOOD COLUMN
5. 8'-0" WIDE X 7'-0" HIGH OVERHEAD DOOR (UNINSULATED)
6. PAINTED PARKING LINES BY OTHERS
7. H.M. PASSAGE DOOR (3'-0" X 7'-0") W/ PAINTED H.M. DOOR FRAME
8. 6" DIA. PIPE BOLLARDS (42" HIGH ABOVE GRADE)
9. ASPHALT SHINGLE ASSEMBLY
10. PRE PRIMED FIBER CEMENT FASCIA ASSEMBLY
11. 12" X 18" PREFINISHED WALL LOUVER (EACH GABLE)
12. 2"X12" WOOD BUMPER @ PERIMETER (2'-2" HIGH TO TOP)

Comm. No. 1758	Foodservice Designer	Mechanical and Electrical Engineers	Structural Engineer	Civil Engineer & Landscape Architect	Owner	Owner: City of Roseville Project: Cedarholm Community Building Title: Cart Shed Plan, Elevations, & Details	I hereby certify that this drawing was prepared by me or under my direct supervision and that I am a duly licensed architect under the laws of the State of Minnesota. By: Title: Architect Date: Registration Number:	Drawing No. a2.0	HAGEN, CHRISTENSEN & McILWAIN ARCHITECTS
ISSUE DATE 06/06/2017 – DESIGN DEVELOPMENT SET 07/10/2017 – BID SET	premier Foodservice Design & Logistics Solution 7101 Northland Terrace, Minneapolis, MN 55428 ph: 763-544-8800 • fax: 763-544-7950 premierorg.com	emanuelson-podas consulting engineers 10401 Bren Road East Minnetonka, MN 55343 ph: 952-930-0050 fax: 952-930-0777 www.epinc.net	Mattson Macdonald Young structural engineers Bassett Creek Business Center 901 North 3rd Street, Suite 100 Minneapolis, MN 55401 612-827-7825 voice 612-827-0805 fax	SRF Consulting Group, Inc.	ROSEVILLE				4201 CEDAR AVENUE SO. • MINNEAPOLIS, MN 55407 TEL (612)824-1332 • FAX (612)824-7366

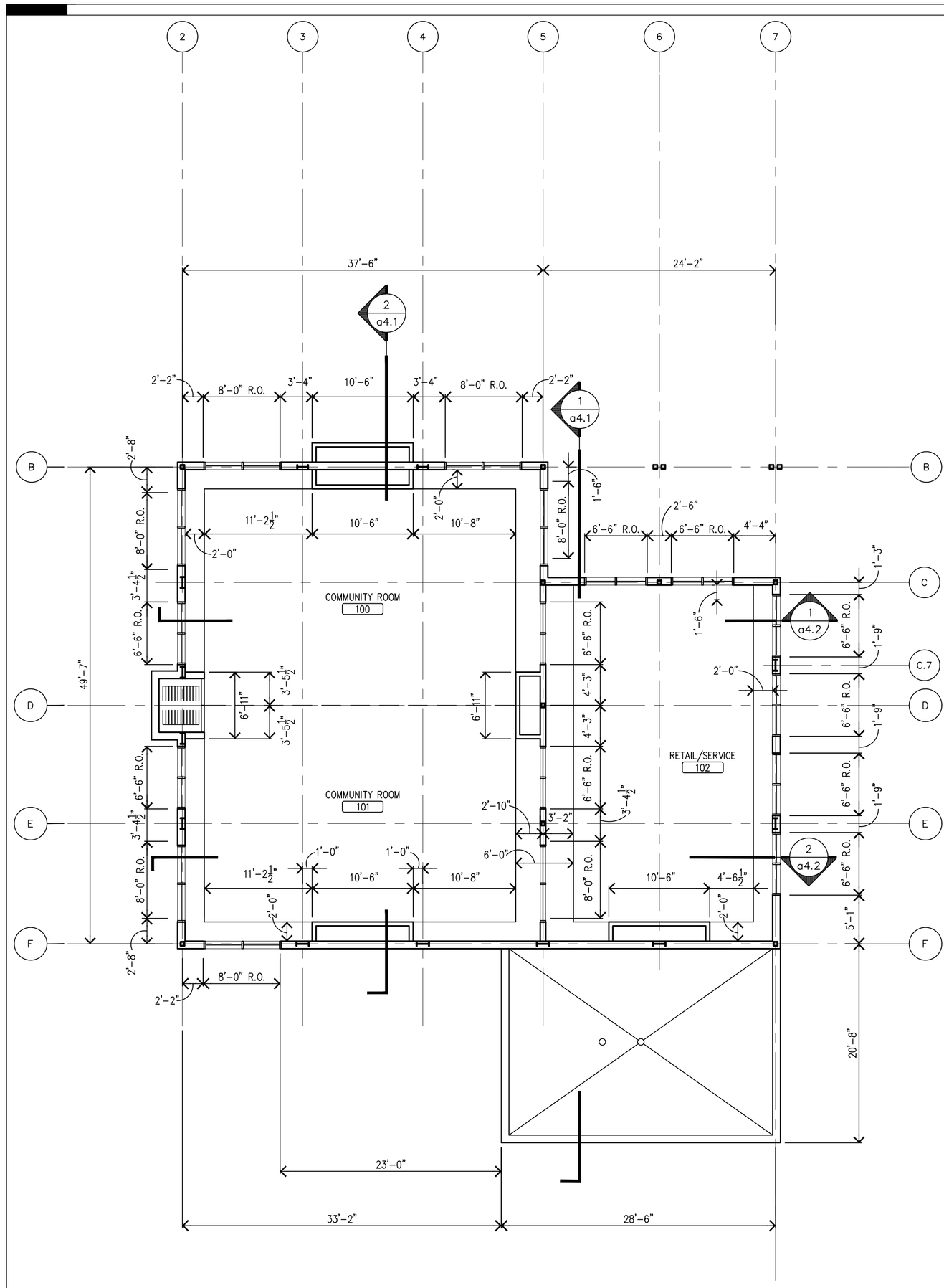

2 FLOOR PLAN – HIGH
1/8"=1'-0"

NORTH

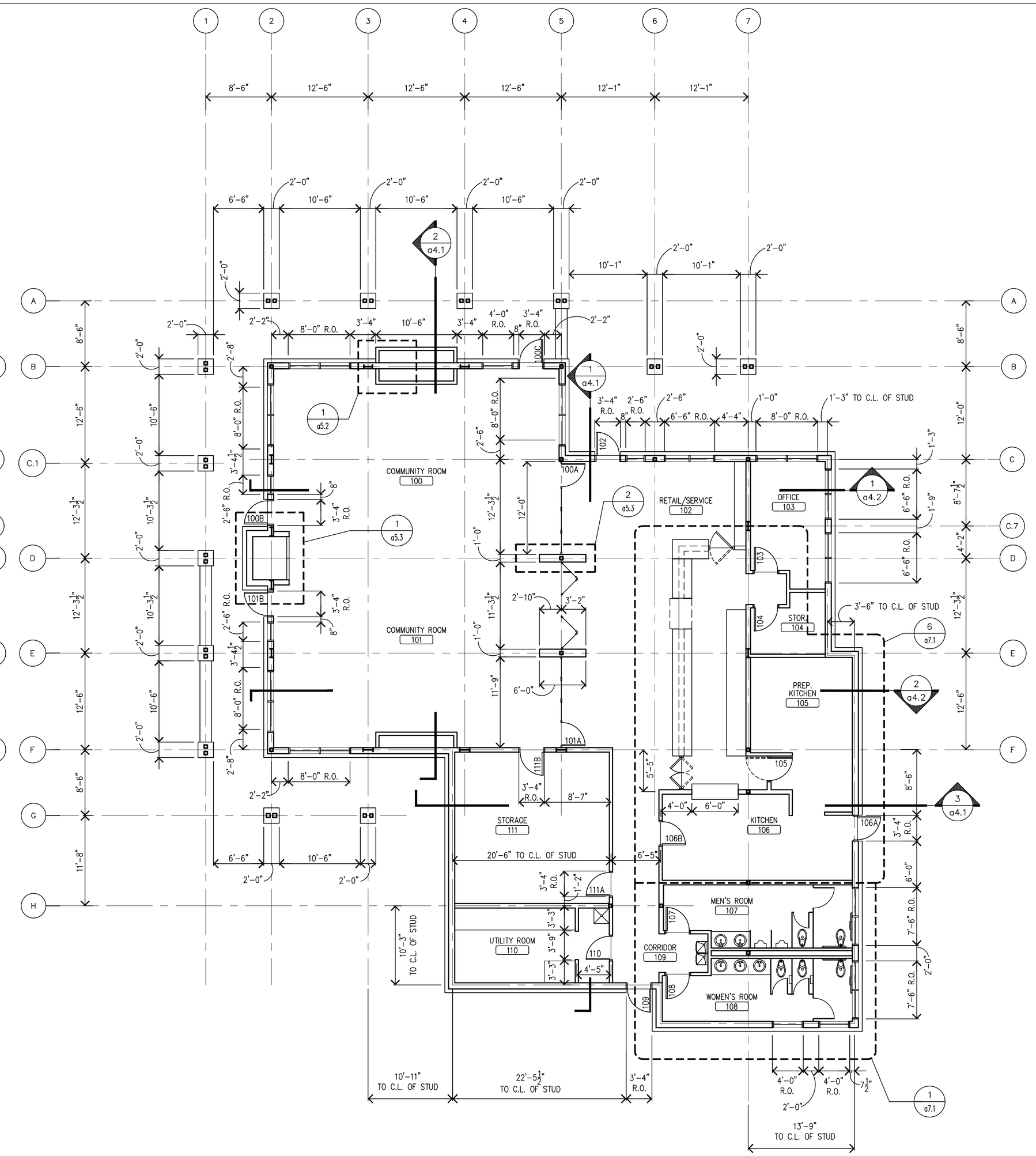

1 FLOOR PLAN – LOW
1/8"=1'-0"

NORTH

FLOOR PLAN GENERAL NOTES

1. ALL DIMENSIONS TO OUTSIDE OF FOUNDATION U.N.O.
2. FOR FINISHES, SEE SHEET i2.1
3. SEE CIVIL, STRUCT., MECH., & ELEC. & FOOD SERVICE DRAWINGS FOR FURTHER INFORMATION

PARTITION TYPES

FLOOR PLAN KEY NOTES

1. 42" WIDE GAS FIREPLACE ASSEMBLY, EXTERIOR RATED W/ SST TRIM
2. 42" WIDE GAS FIREPLACE ASSEMBLY
3. LINE OF ROOF OVERHANG ABOVE
4. NOT USED
5. SITE WALL –SEE CIVIL
6. CONC. WALK –SEE CIVIL
7. BITUMINOUS CART PATH – SEE CIVIL
8. 2" THICK STONE HEARTH
9. STONE VENEER CHIMNEY BREAST
10. 1 1/4" THICK QUARTZ COUNTERTOP (TOP FACE @ 42" HIGH)
11. STEEL STUD DIE WALL FULL LENGTH OF BAR
12. DOUBLE–ACTING WOOD BAR GATE
13. 3" THICK FOLDABLE PARTITION WALL –BASIS OF DESIGN, HUFCOR SERIES 631 (APPROX. 18'–0"H X 36'–0"L)
14. FOLDABLE GLASS PARTITION WALL –BASIS OF DESIGN, HUFCOR SERIES GL1 INDIVIDUAL (APPROX 8'–5"H X 12'–0"L)
15. HORIZONTAL MECHANICAL CHASE –SEE BUILDING SECTIONS ON SHEET a4.1
16. RETAIL BEVERAGE/SNACK COOLER B.O.
17. SEE FOOD SERVICE DRAWINGS FOR KITCHEN EQUIPMENT
18. MOP SINK –SEE MECH.
19. STEEL COLUMN (X2) ON STONE BASE –SEE STRUCT.
20. POCKET FOR FOLDABLE PARTITION WALL
21. CONCRETE HOUSEKEEPING PAD (4" THICK)

Comm. No.	Foodservice Designer	Mechanical and Electrical Engineers	Structural Engineer	Civil Engineer & Landscape Architect	Owner	Owner	I hereby certify that this drawing was prepared by me or under my direct supervision and that I am a duly licensed architect under the laws of the State of Minnesota.	Drawing No.
1758	premier Exceptional Design ● Legendary Details 7501 Northland Terrace, Minneapolis, MN 55428 ph: 763-544-0800 ● fax: 763-544-7940 premierinc.com	emanuelson-podas consulting engineers 10401 Bren Road East Minnetonka, MN 55343 ph: 952–930–0050 fax: 952–930–0777 www.epinc.net	Mattson Macdonald Young structural engineers Bassett Creek Business Center 901 North 3rd Street, Suite 100 Minneapolis, MN 55401 612-827-7825 voice 612-827-0805 fax	SRF Consulting Group, Inc.	ROSEVILLE	Owner City of Roseville Project Cedarholm Community Building Title Floor Plan	By: Title: Architect Date: Registration Number:	a2.1

ISSUE DATE
06/06/2017 – DESIGN DEVELOPMENT SET
07/10/2017 – BID SET

HAGEN, CHRISTENSEN & McILWAIN
ARCHITECTS
4201 CEDAR AVENUE SO. • MINNEAPOLIS, MN 55407
TEL. (612)804-1932 • FAX (612)804-7388

FINISHES SCHEDULE

FLOOR FINISHES

CPT.1 CARPET TILE
MFR: INTERFACE
STYLE: 6003002504 FLOR41Z
COLOR: 603188 BLACK-BROWN

CPT.2 CARPET TILE
MFR: INTERFACE
COLLECTION: WHOLE EARTH
STYLE: 124990AK00
COLOR: 104420 CAPPUCCINO
PATTERN: ASHLAR

FT.1 PORCELAIN FLOOR TILE
MFR: NOVABELL
STYLE: MILANO FLOOR 4 DESIGN
COLOR: NAVIGLI
SIZE: 12"x24"
PATTERN: GRID
GROUT: TBD
REP: JENNIFER CHRISTOPHER
TILExDESIGN
612-280-9197
JCHRISTOPHER@TILEXDESIGN.COM

FT.2 PORCELAIN FLOOR TILE
MFR: DOM CERAMICHE
STYLE: APPROACH
COLOR: BROWN
SIZE: 14"x16" ESAGONA (HEXAGON)
PATTERN: GRID
GROUT: TBD
REP: JENNIFER CHRISTOPHER, TILExDESIGN

SC.1 SEALED CONCRETE FLOOR
COLOR: NATURAL
FINISH: SEALER

BASE FINISHES

PTB.1 PORCELAIN TILE BASE
MFR: DOM CERAMICHE
STYLE: APPROACH
COLOR: BROWN
SIZE: 6 1/2"x20"
PATTERN: HORIZONTAL, WITH SST SCHLUTER COVE TRIM PIECE

VB.1 VINYL BASE
MFR: TBD
STYLE:
PATTERN:

WDB.1 WOOD BASE
MFR: TBD
STYLE: SEE DETAIL...
FINISH: STAIN TBD

WALL FINISHES

WT.1 CERAMIC WALL TILE (FULL HEIGHT)
MFR: SETTECENTO
STYLE: CRAYONS
COLOR: CARAMEL
SIZE: 3"x12"
PATTERN: HORIZONTAL, GRID
GROUT: TBD
REP: JENNIFER CHRISTOPHER, TILExDESIGN
*8-10 WEEK LEAD TIME

WT.2 CERAMIC WALL TILE (ACCENT TILE)
MFR: SETTECENTO
STYLE: CRAYONS
COLOR: TBD
SIZE: 3"x12"
PATTERN: SEE X/a7.x
GROUT: TBD
REP: JENNIFER CHRISTOPHER, TILExDESIGN
*8-10 WEEK LEAD TIME

WT.3 PORCELAIN WALL TILE (BAR FACE)
MFR: NOVABELL
STYLE: MILAN FLOOR 4 DESIGN
COLOR: NAVIGLI BRICK
SIZE: 4"x24"
PATTERN: HORIZONTAL 1/3 OFFSET
GROUT: TBD
REP: JENNIFER CHRISTOPHER, TILExDESIGN

WT.4 PORCELAIN WALL TILE (WAINSCOT TO 5' A.F.F.)
MFR: COEM
STYLE: REVERSO
COLOR: BEIGE NATURALE
SIZE: 12"x24"
PATTERN: HORIZONTAL 1/3 OFFSET
GROUT: TBD
REP: JENNIFER CHRISTOPHER, TILExDESIGN

FRP.1 FIBERGLASS REINFORCED PANEL
COLOR: WHITE
FINISH: SMOOTH

PT.1 PAINT
MFR:
COLOR:
FINISH: EGGSHELL

PT.2 PAINT
MFR:
COLOR:
FINISH: EGGSHELL

PT.3 PAINT
MFR:
COLOR:
FINISH: EGGSHELL

WD.1 WOOD TRIM
MFR:
COLOR:
FINISH: STAIN TBD

CEILING

EPT.3 PAINT - EPOXY
MFR:
COLOR:
FINISH:

WD.1 WOOD
MFR:
COLOR:
FINISH:

PT.1 PAINT
MFR:
COLOR:
FINISH:

OTHER ITEMS

SS.1 SOLID SURFACE (LAVATORY COUNTERS & BAR)
MFR:
COLOR:

TP.1 TOILET PARTITIONS
MFR: BRADLEY SOLID PLASTIC
COLOR: TBD

CMB METAL TRIM STRIP
MFR: SCHLUTER
STYLE: QUADEC
FINISH: STAINLESS STEEL

PT.4 PAINT (HM DOOR FRAMES)
MFR:
COLOR:
FINISH: SATIN

ST.1 MASONRY
MFR:
TYPE:
FINISH:

EXTERIOR FINISHES

ST.1 MASONRY
MFR:
STYLE:
FINISH:
PATTERN: COMMON BOND

PT.100 PAINT
MFR:
COLOR:
FINISH:

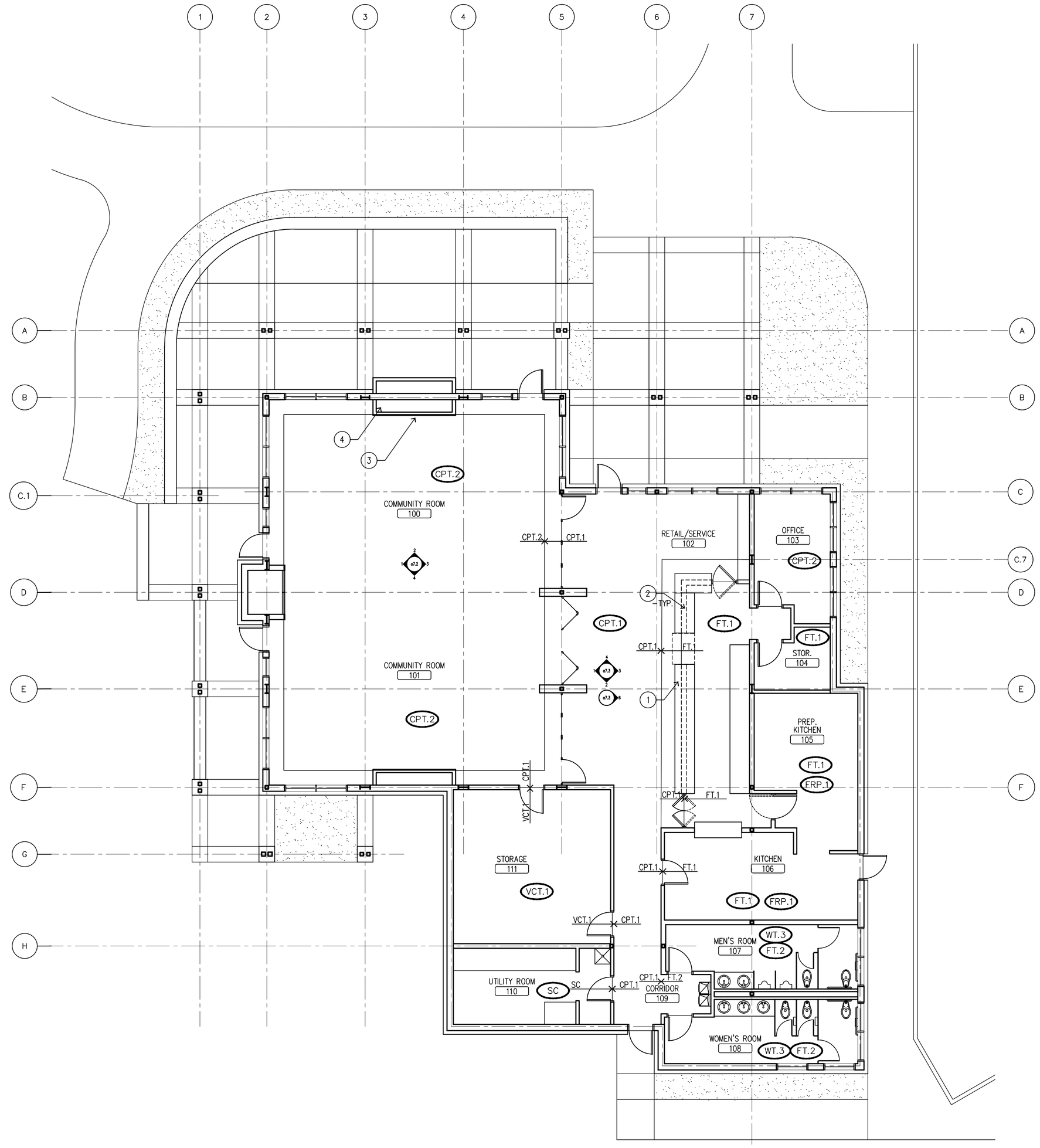

1 FINISHES FLOOR PLAN
1/8"=1'-0"

NORTH

FINISH PLAN GENERAL NOTES

1. SEE PROJECT MANUAL FOR FINISH SPECIFICATIONS AND INSTALLATION INSTRUCTIONS
2. ALL PAINTED METAL GRILLES, LOUVERS, ETC. TO BE POWDER COAT FINISHED TO MATCH THE MATERIAL ON WHICH THEY ARE MOUNTED
3. PAINTING CONTRACTORS APPLICATION OF WALL FINISH CONSTITUTES ACCEPTANCE OF WALL CONDITION AND RESPONSIBILITY FOR IMPERFECTION CORRECTION
4. ALL TRIM TO BE STAINED UNLESS OTHERWISE NOTED
5. ALL HM FRAMES TO BE PAINTED
6. ALL WALLS TO BE PAINTED UNLESS OTHERWISE NOTED
7. PROVIDE HARDIEBACKER 500 CEMENT BOARD BEHIND ALL WALL TILE FINISH AREAS
8. MATERIALS AND FINISHES ARE CONSIDERED THE BASIS OF DESIGN PRODUCT. OWNER MAY SELECT OTHER COLOR OPTIONS WITHIN THE SELECTED PRODUCT LINE

FINISH PLAN SYMBOLS

RUB.1 VCT.1 — FLOORING TRANSITIONS

CT.1 — WALL FINISH TAG

FINISH PLAN KEY NOTES

1. 1 1/4" THICK QUARTZ (SS.1) COUNTERTOP
2. WOOD STILE & RAIL PANEL FINISH ON DIE WALL
3. MASONRY (ST.1) HEARTH
4. MASONRY (ST.1) CHIMNEY BREAST

Comm. No. 1758	Foodservice Designer	Mechanical and Electrical Engineers	Structural Engineer	Civil Engineer & Landscape Architect	Owner	Owner: City of Roseville Project: Cedarholm Community Building Title: Finishes Floor Plan	I hereby certify that this drawing was prepared by me or under my direct supervision and that I am a duly licensed architect under the laws of the State of Minnesota. By: Title: Architect Date: Registration Number:	Drawing No. a2.1i
ISSUE DATE 06/06/2017 - DESIGN DEVELOPMENT SET 07/10/2017 - BID SET	premier Foodservice Design & Equipment, Interiors 7205 Northland Terrace, Minneapolis, MN 55428 ph: 763-544-5800 • fax: 763-544-7940 premierenq.com	emanuelson-podas consulting engineers 10401 Bren Road East Minnetonka, MN 55343 ph: 952-930-0050 fax: 952-930-0777 www.epinc.net	Mattson Macdonald Young structural engineers Bassett Creek Business Center 901 North 3rd Street, Suite 100 Minneapolis, MN 55401 612-827-7825 voice 612-827-0805 fax	SRF Consulting Group, Inc.	ROSEVILLE			

HAGEN, CHRISTENSEN & McILWAIN
ARCHITECTS
4201 CEDAR AVENUE SO. • MINNEAPOLIS, MN 55407
TEL (612)804-1332 • FAX (612)804-7366

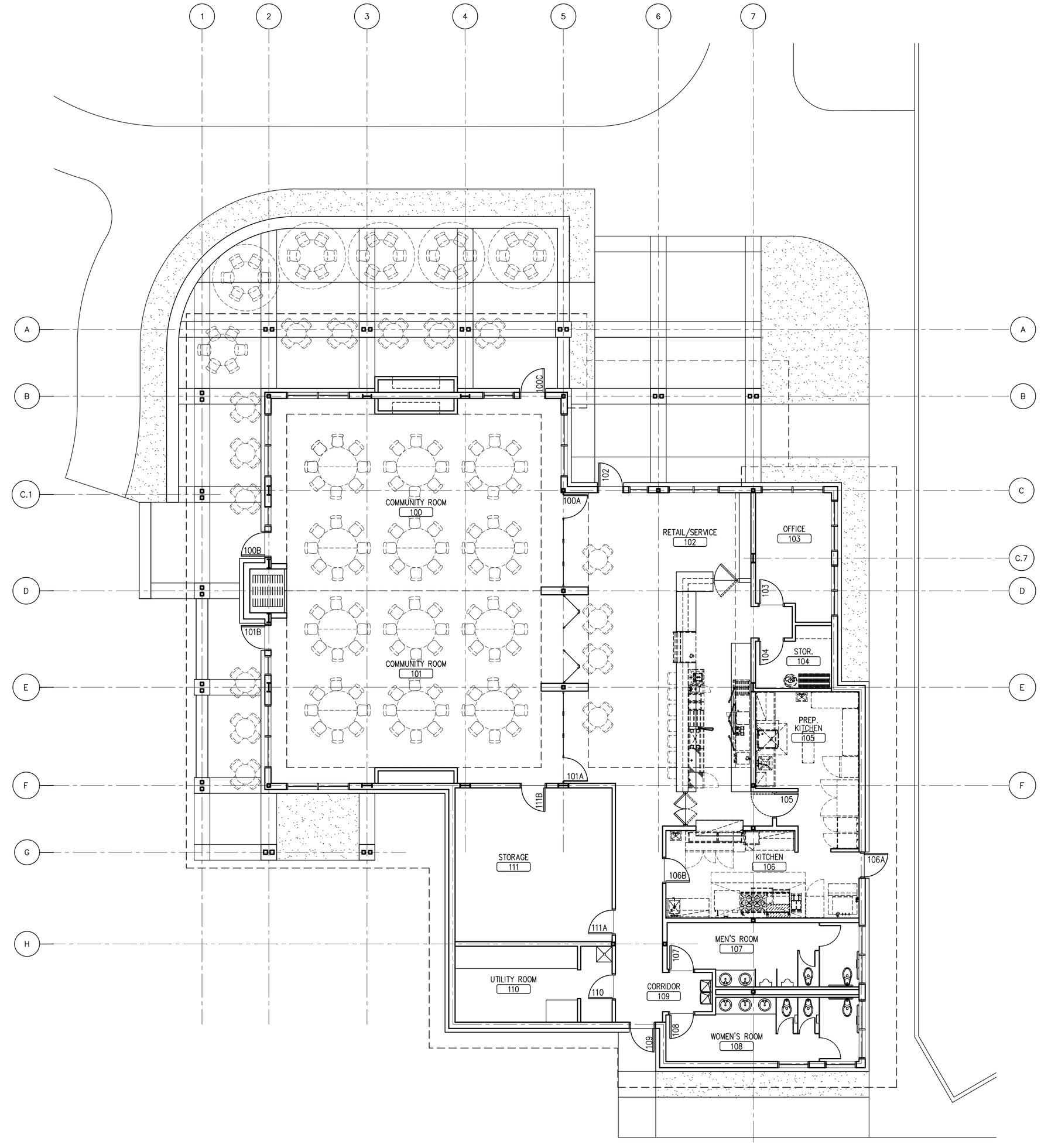

GENERAL NOTES: FURN. & EQUIP. PLAN

1. FURNITURE PACKAGE TO BE SUBMITTED SEPARATELY.
2. G.C. TO PROVIDE BLOCKING AT LOCATIONS SCHEDULED TO RECEIVE WALL MOUNTED MILLWORK, COUNTERTOPS, SHELVING, ETC.
3. REFER TO ELECTRICAL DRAWINGS FOR POWER AND DATA CONNECTIONS.
4. REFER TO SHEET a2.1i FOR FINISH SCHEDULE.

KEY NOTES: FURNITURE & EQUIP. PLAN

1. 30" DIA. TABLE W/(4) CHAIRS
2. 48" DIA. TABLE W/(6) CHAIRS
3. 60" DIA. TABLE W/(8) CHAIRS
4. 30" X 72" TABLE W/(6) CHAIRS
5. BAR HEIGHT CHAIR
6. T.V. B.O.
7. SEE FOOD SERVICE DRAWINGS FOR KITCHEN EQUIPMENT

1 FURNITURE & EQUIPMENT FLOOR PLAN
1/8"=1'-0"

NORTH

Comm. No.	Foodservice Designer	Mechanical and Electrical Engineers	Structural Engineer	Civil Engineer & Landscape Architect	Owner	Owner		Drawing No.
1758	premier Exceptional Design ■ Legendary Results 1100 Nicollet Mall, Minneapolis, MN 55403 ph: 952-944-8800 ■ fax: 952-944-7966 premiereq.com	emanuelson-podas consulting engineers 10401 Bren Road East Minnetonka, MN 55343 ph: 952-930-0050 fax: 952-930-0777 www.epinc.net	Mattson Macdonald Young structural engineers Bassett Creek Business Center 901 North 3rd Street, Suite 100 Minneapolis, MN 55401 612-827-7825 voice 612-827-0805 fax	SRF Consulting Group, Inc.	ROSEVILLE	City of Roseville Project Cedarholm Community Building Title Furnishings & Equipment Floor Plan	I hereby certify that this drawing was prepared by me or under my direct supervision and that I am a duly licensed architect under the laws of the State of Minnesota. By: Title: Architect Date: Registration Number:	fe2.1

ISSUE DATE
06/06/2017 - DESIGN DEVELOPMENT SET
07/10/2017 - BID SET

HAGEN, CHRISTENSEN & McILWAIN
ARCHITECTS
4201 CEDAR AVENUE SO. • MINNEAPOLIS, MN 55407
TEL (612)804-1932 • FAX (612)804-7388

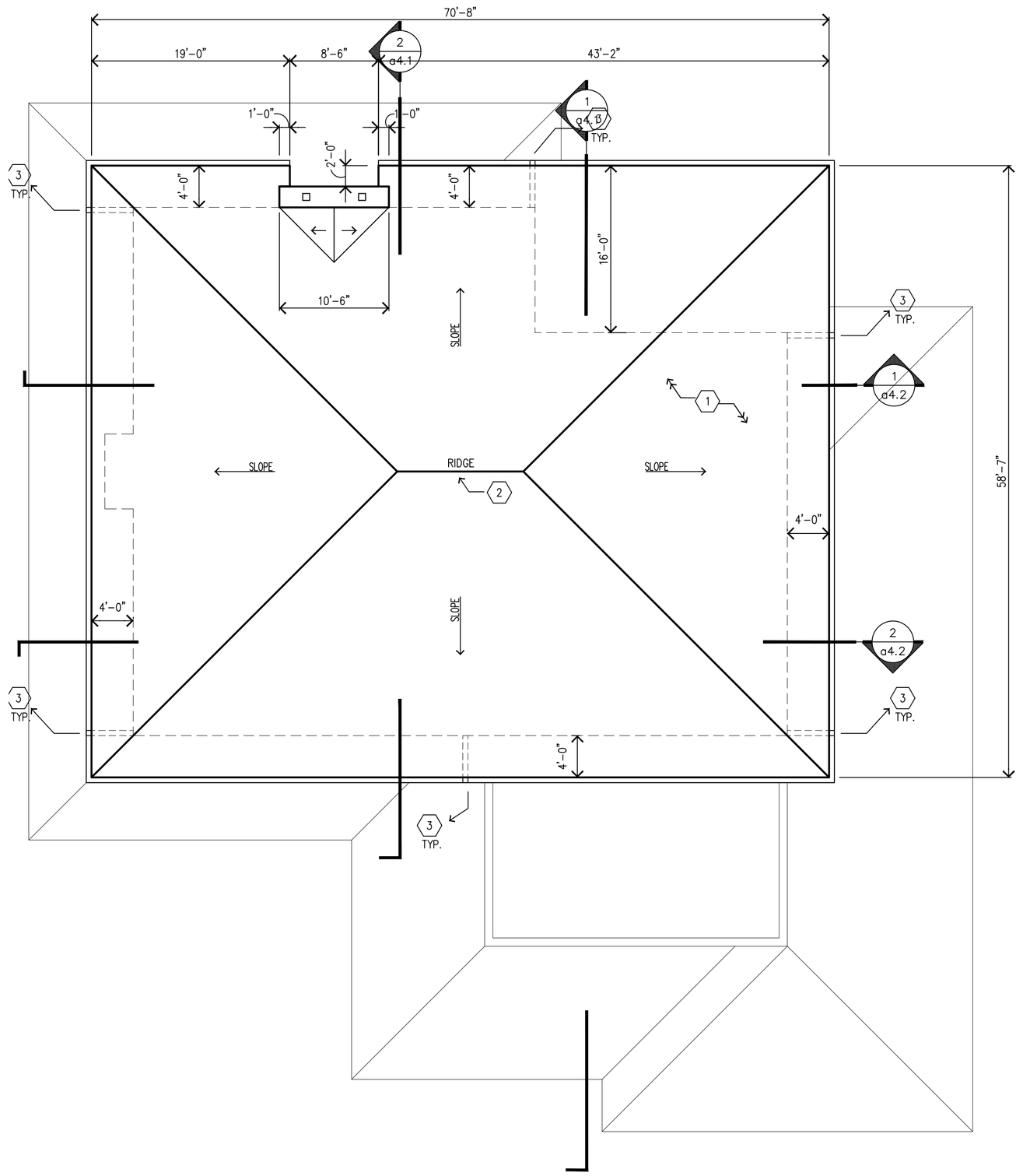

2 ROOF PLAN – HIGH
1/8"=1'-0"

NORTH

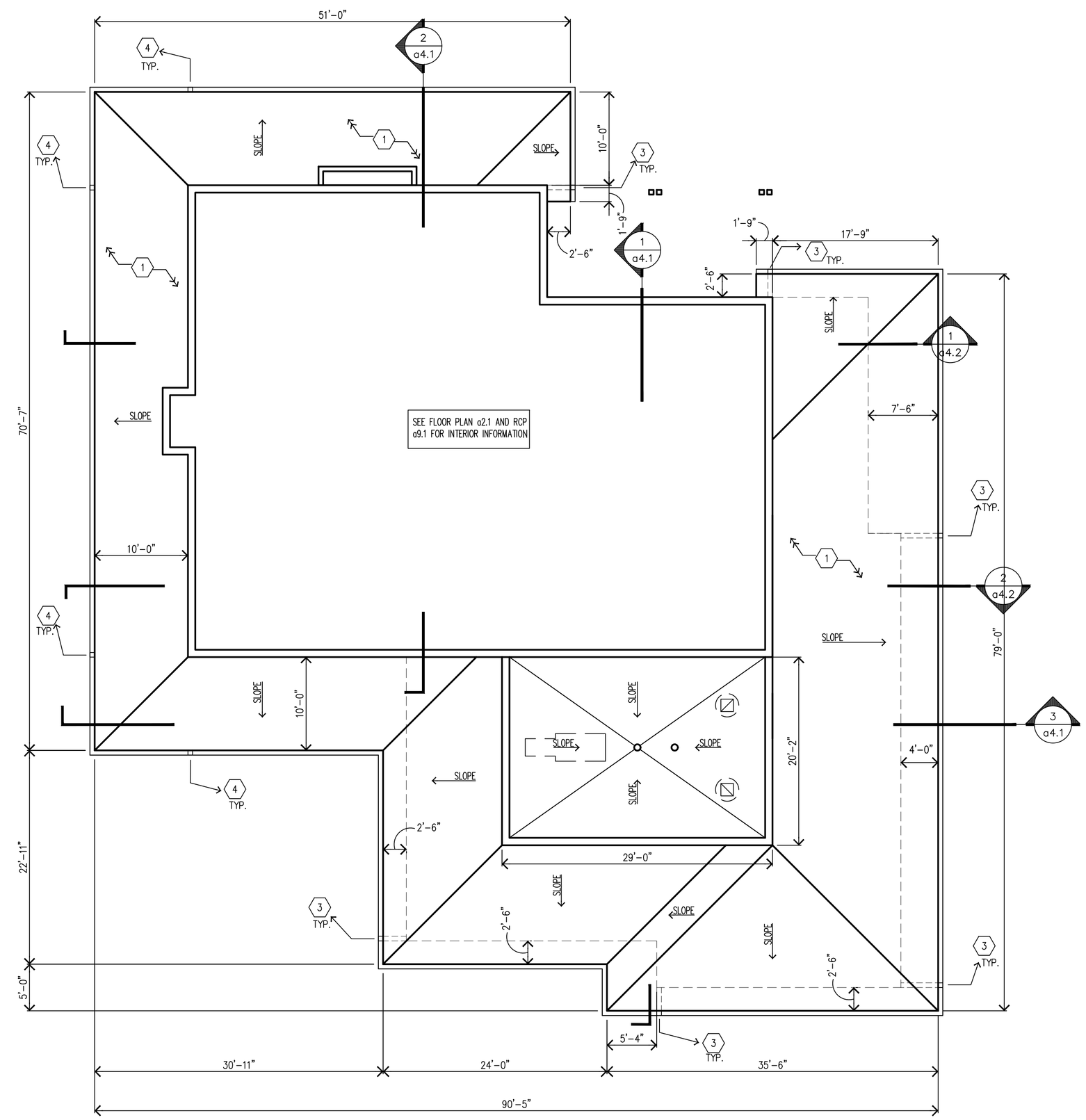

1 ROOF PLAN – LOW
1/8"=1'-0"

NORTH

ROOF PLAN GENERAL NOTES

1. PROVIDE EQUIPMENT CURBS AS REQUIRED
2. PROVIDE PITCH POCKETS AS REQUIRED
3. SEE MECH & ELEC. DRAWINGS FOR SCORE OF ROOF EQUIPMENT & PENETRATIONS
4. PREFINISHED METAL GUTTERS & DOWNSPOUTS @ ALL ROOFS

ROOF PLAN KEY NOTES:

1. ASPHALT SHINGLE ASSEMBLY
2. 1/4"/FT SLOPE "FLAT" ROOF W/ 90 MIL 30 YR FULLY ADHERED EPDM MEMBRANE
3. PREFINISHED METAL PARAPET CAP
4. PRIMARY ROOF DRAIN
5. OVERFLOW ROOF DRAIN
6. CONCRETE CHIMNEY CAP
7. FLUE VENT
8. CRICKET
9. MAKE UP AIR UNIT – SEE MECH.
10. EXHAUST – SEE MECH.

Comm. No.
1758

ISSUE DATE
06/06/2017 – DESIGN DEVELOPMENT SET
07/10/2017 – BID SET

Foodservice Designer
premier
Exceptional Design • Legendary Service
2020 Northland Terrace, Minneapolis, MN 55430
ph: 763-566-9000 fax: 763-566-1940
premierslg.com

Mechanical and Electrical Engineers
emanuelson-podas consulting engineers
10401 Bren Road East
Minnetonka, MN
55343
ph: 952–930–0050
fax: 952–930–0777
www.epinc.net

Structural Engineer
Mattson Macdonald Young structural engineers
Bassett Creek Business Center
901 North 3rd Street, Suite 100
Minneapolis, MN 55401
612-827-7825 voice
612-827-0805 fax

Civil Engineer & Landscape Architect
SRF Consulting Group, Inc.

Owner
ROSEVILLE

Owner
City of Roseville
Project
Cedarholm Community Building
Title
Roof Plan

I hereby certify that this drawing was prepared by me or under my direct supervision and that I am a duly licensed architect under the laws of the State of Minnesota.

By:

Title: Architect Date:

Registration Number:

Drawing No.
a2.2

HAGEN, CHRISTENSEN & MCILWAIN
ARCHITECTS
4201 CEDAR AVENUE SO. • MINNEAPOLIS, MN 55407
TEL. (612)804-1332 • FAX (612)804-7366

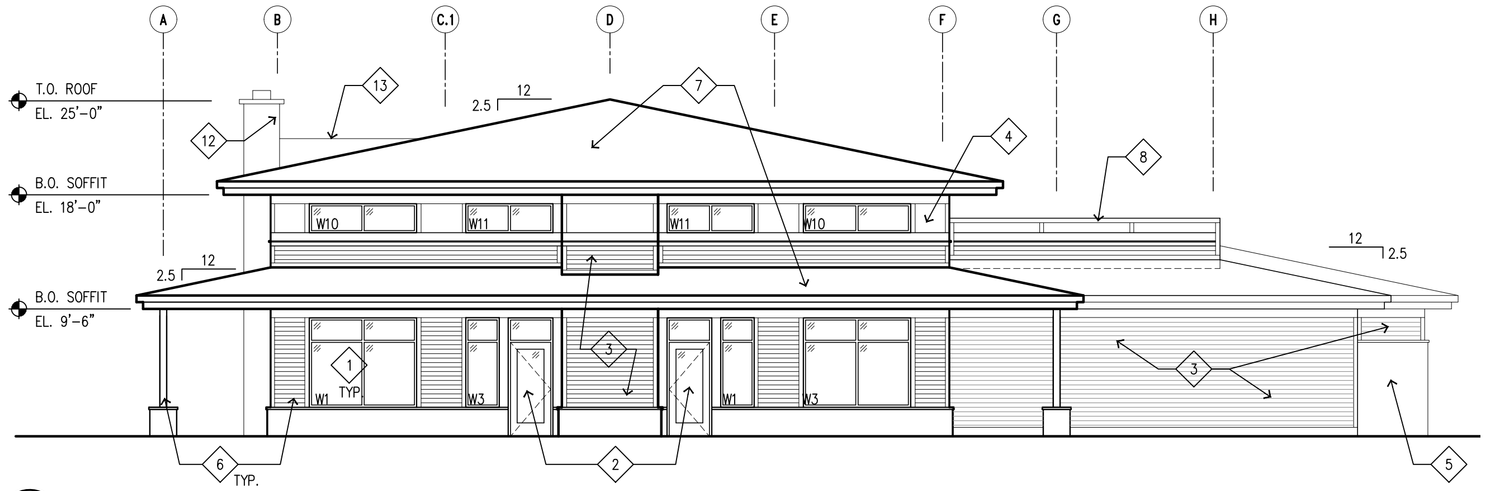

5 WEST ELEVATION
1/8"=1'-0"

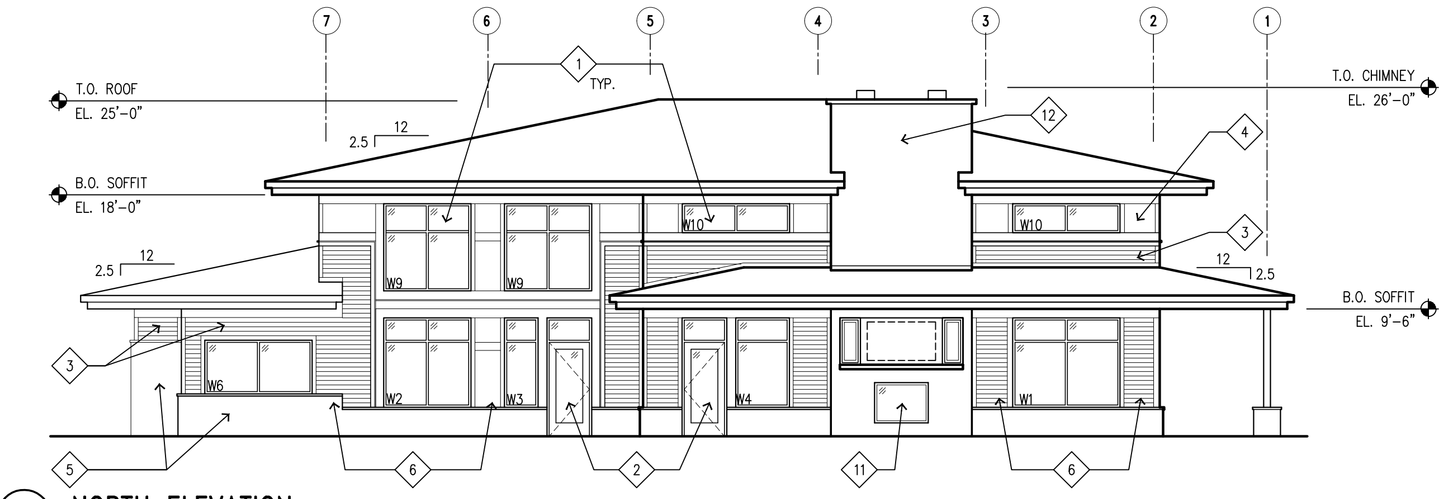

1 NORTH ELEVATION
1/8"=1'-0"

EXTERIOR ELEVATION KEY NOTES

1. PREFINISHED METAL CLAD WOOD WINDOWS WITH 1" INSULATED GLASS UNITS
2. PREFINISHED ALUMINUM STOREFRONT DOOR AND FRAME ASSEMBLY WITH 1" INSULATED TEMPERED GLASS UNITS
3. PRE-PRIMED FIBER CEMENT LAP SIDING – PAINT
4. PRE-PRIMED FIBER CEMENT PANEL SIDING (BOARD AND BATTEN) – PAINT
5. MASONRY VENEER BASE
6. DUAL STEEL COLUMN SUPPORT ASSEMBLY (PRE-PRIMED, PAINT) WITH MASONRY VENEER BASE ASSEMBLY AND ARCHITECTURAL PRECAST CAP (SHOWN DASHED FOR CLARITY)
7. LAMINATED ASPHALT SHINGLE ROOF ASSEMBLY WITH PRE-PRIMED FIBER CEMENT TRIM BOARD FASCIA ASSEMBLY AND WOOD TONGUE AND GROOVE VENTED SOFFIT PANELS (STAIN)
8. PARAPET WALL AT PERIMETER OF MECHANICAL FLAT ROOF AREA –PROVIDE FIBER CEMENT PANEL SIDING (BOARD AND BATTEN – PAINT) AND CONTINUOUS PREFINISHED METAL ROOF COPING
9. PREFINISHED METAL CLAD WOOD WINDOW WITH TRANSLUCENT GLAZING
10. INSULATED HOLLOW METAL DOOR AND FRAME – PAINT
11. EXTERIOR GAS FIREPLACE WITH MASONRY VENEER HEARTH BELOW
12. FIREPLACE CHIMNEY ASSEMBLY –MASONRY VENEER FULL HEIGHT
13. ROOF CRICKET AT BACK SIDE OF CHIMNEY ASSEMBLY
14. STONE VENEER SEATING WALL – SEE CIVIL DRAWINGS

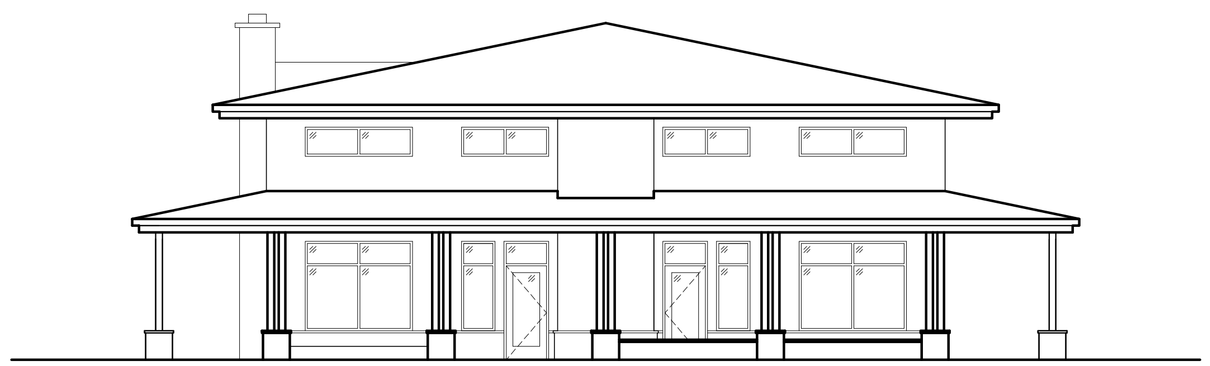

6 PARTIAL WEST ELEVATION – COLUMNS
1/8"=1'-0"

2 PARTIAL NORTH ELEVATION – COLUMNS
1/8"=1'-0"

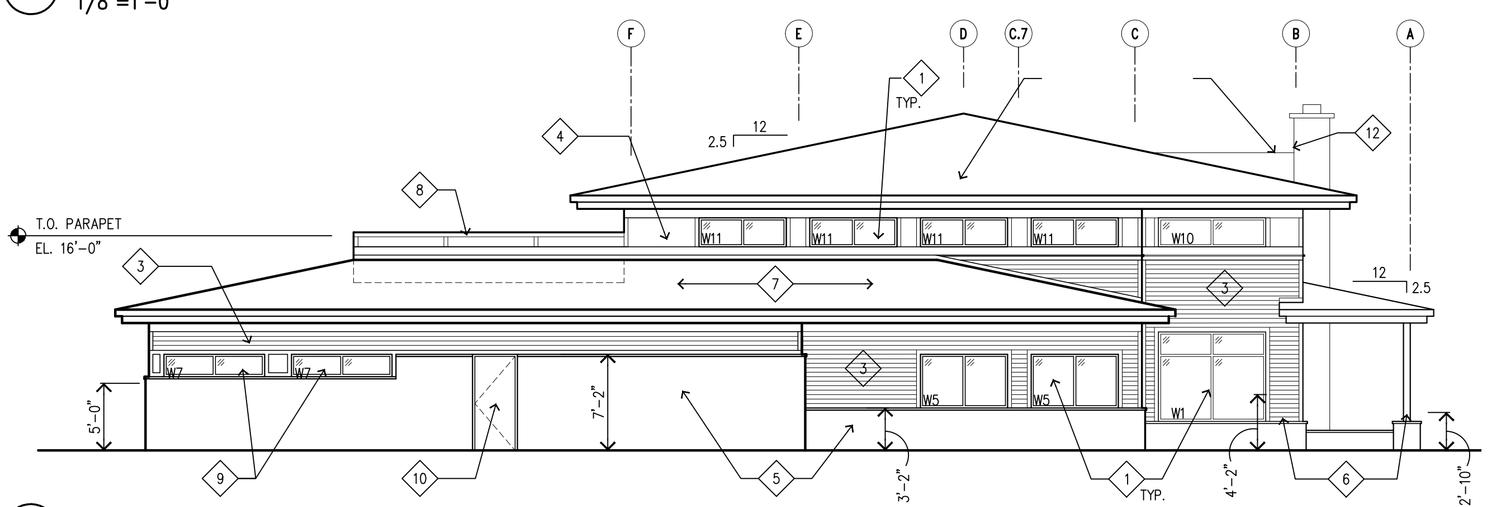

7 EAST ELEVATION
1/8"=1'-0"

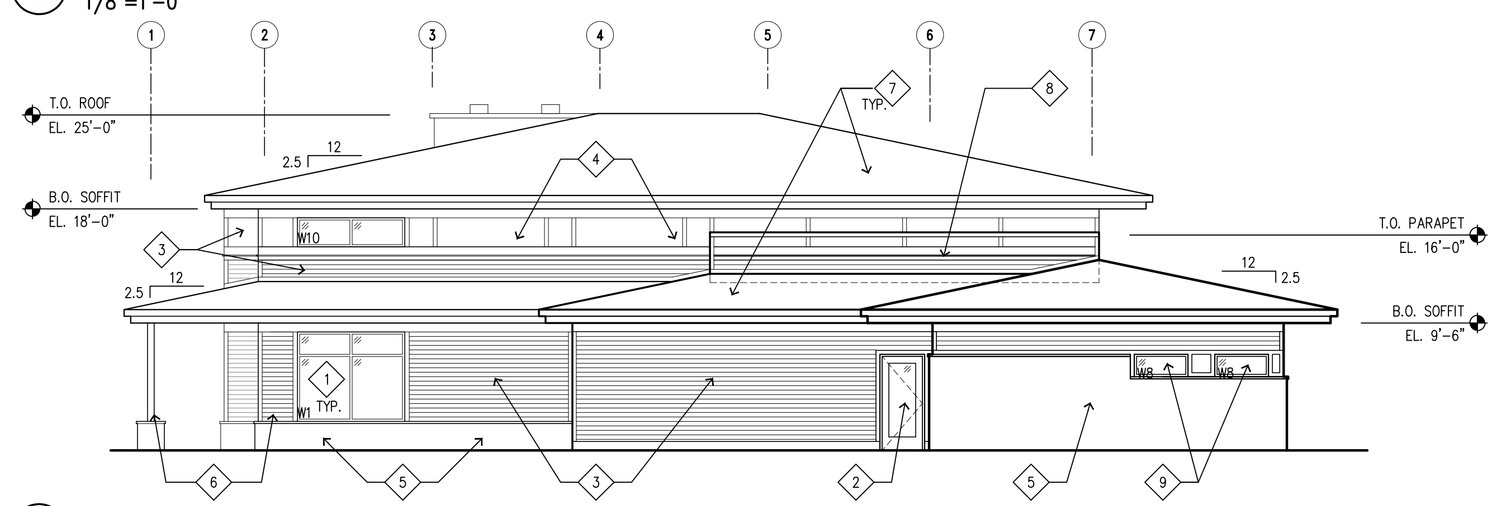

3 SOUTH ELEVATION
1/8"=1'-0"

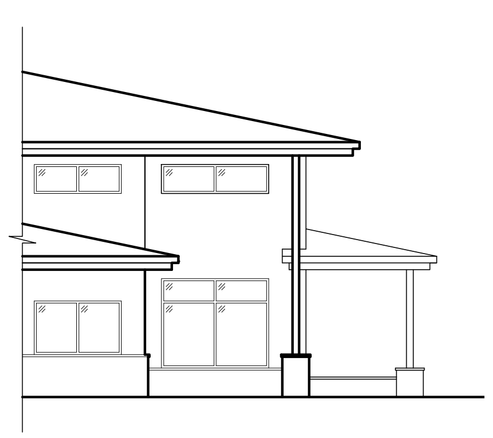

8 PARTIAL EAST ELEVATION – COLUMNS
1/8"=1'-0"

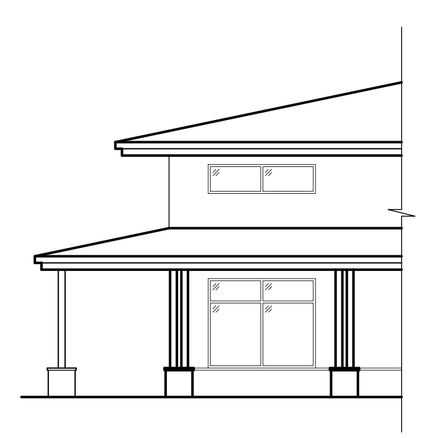

4 PARTIAL SOUTH ELEVATION – COLUMNS
1/8"=1'-0"

Comm. No.	Foodservice Designer	Mechanical and Electrical Engineers	Structural Engineer	Civil Engineer & Landscape Architect	Owner	Owner	I hereby certify that this drawing was prepared by me or under my direct supervision and that I am a duly licensed architect under the laws of the State of Minnesota.	Drawing No.
1758	premier Foodservice Design ■ Equipment Installation 7500 Northland Terrace, Minneapolis, MN 55428 ph: 763-544-0800 ■ fax: 763-544-7949 premierinc.com	emanuelson-podas consulting engineers 10401 Bren Road East Minnetonka, MN 55343 ph: 952-930-0050 fax: 952-930-0777 www.epinc.net	Mattson Macdonald Young structural engineers Bassett Creek Business Center 901 North 3rd Street, Suite 100 Minneapolis, MN 55401 612-827-7825 voice 612-827-0805 fax	SRF Consulting Group, Inc.	ROSEVILLE	City of Roseville Project Cedarholm Community Building Title Exterior Elevations	By: Title: Architect Date: Registration Number:	a3.1

ISSUE DATE
06/06/2017 – DESIGN DEVELOPMENT SET
07/10/2017 – BID SET

HAGEN, CHRISTENSEN & McILWAIN
ARCHITECTS
4201 CEDAR AVENUE SO. • MINNEAPOLIS, MN 55407
TEL. (612)904-1392 • FAX (612)904-7388

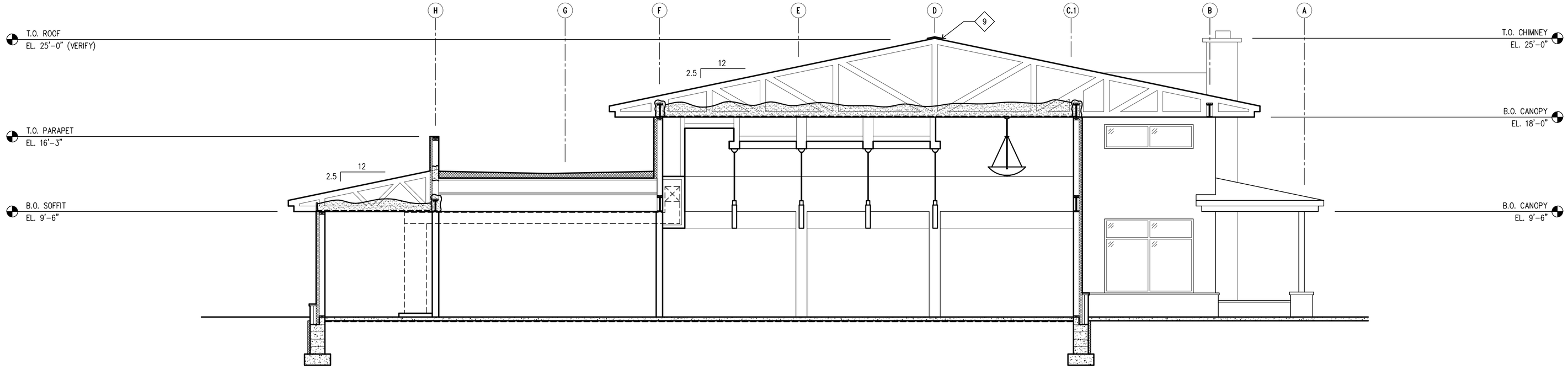

1 BUILDING SECTION – VIEW WEST
3/16"=1'-0"

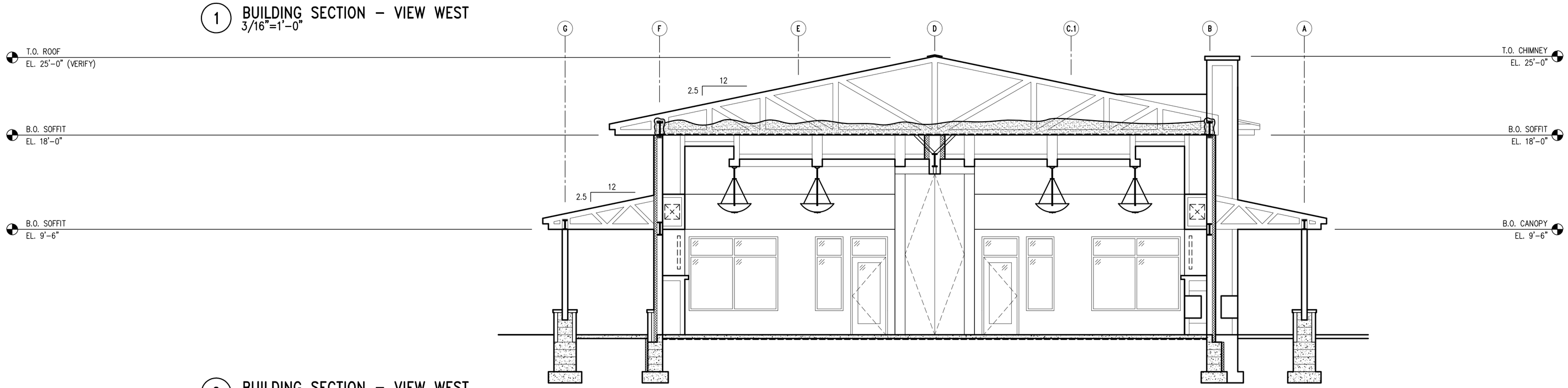

2 BUILDING SECTION – VIEW WEST
3/16"=1'-0"

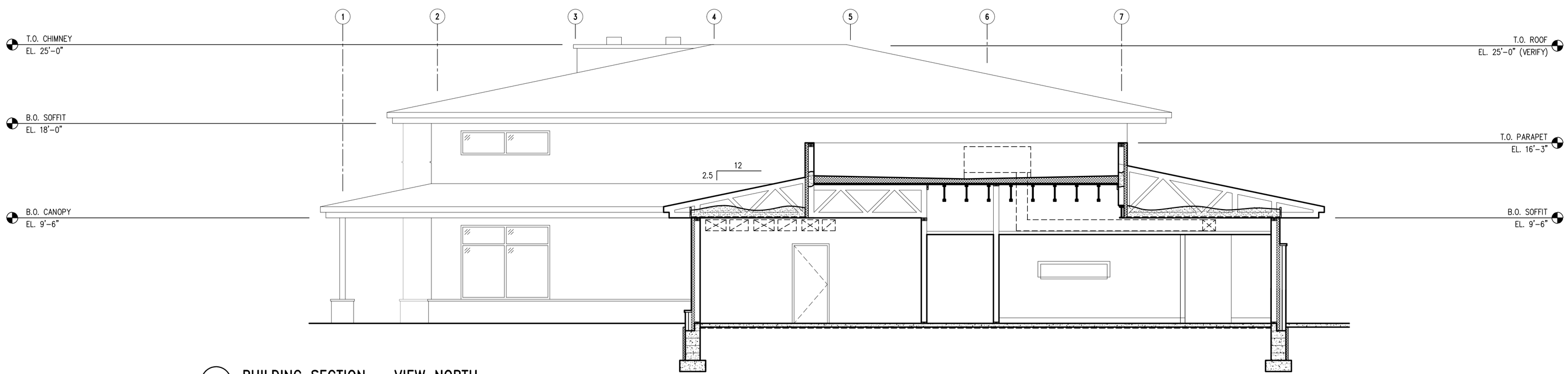

3 BUILDING SECTION – VIEW NORTH
3/16"=1'-0"

BUILDING SECTION KEY NOTES

1
2
3
4
5
6
7
8
9
10
11
12
13
14

Comm. No. 1758 ISSUE DATE 06/06/2017 – DESIGN DEVELOPMENT SET 07/10/2017 – BID SET	Foodservice Designer premier Foodservice Design ■ Ergonomics ■ Installation 7320 Northland Terrace, Minneapolis, MN 55428 ph: 763-544-8800 ■ fax: 763-544-7900 premierenq.com	Mechanical and Electrical Engineers emanuelson-podas consulting engineers 10401 Bren Road East Minnetonka, MN 55343 ph: 952-930-0050 fax: 952-930-0777 www.epinc.net	Structural Engineer Mattson Macdonald Young structural engineers Bassett Creek Business Center 901 North 3rd Street, Suite 100 Minneapolis, MN 55401 612-827-7825 voice 612-827-0805 fax	Civil Engineer & Landscape Architect SRF Consulting Group, Inc.	Owner ROSEVILLE	Owner City of Roseville Project Cedarholm Community Building Title Building Sections	I hereby certify that this drawing was prepared by me or under my direct supervision and that I am a duly licensed architect under the laws of the State of Minnesota. By: Title: Architect Date: Registration Number:	Drawing No. a4.1	HAGEN, CHRISTENSEN & McILWAIN ARCHITECTS 4201 CEDAR AVENUE SO. • MINNEAPOLIS, MN 55407 TEL. (612)904-1332 • FAX (612)904-7386

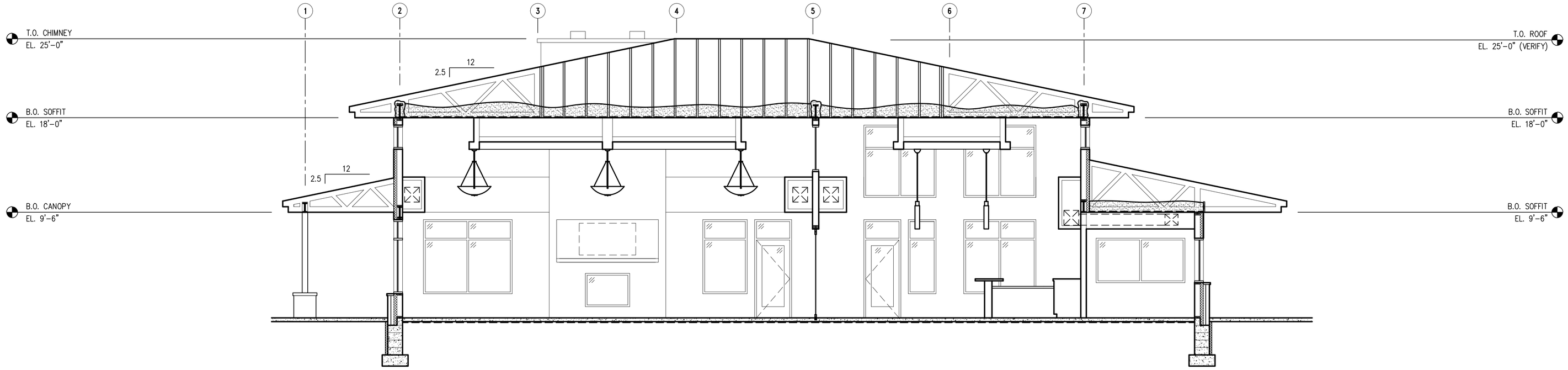

1 BUILDING SECTION – VIEW NORTH
3/16"=1'-0"

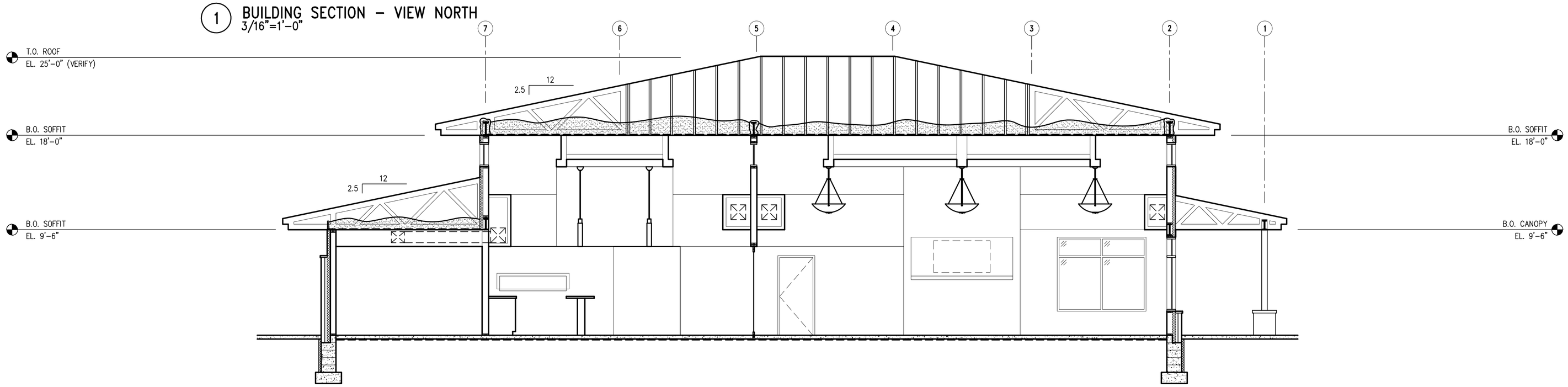

2 BUILDING SECTION – VIEW SOUTH
3/16"=1'-0"

BUILDING SECTION KEY NOTES

1
2
3
4
5
6
7
8
9
10
11
12
13
14

Comm. No.	Foodservice Designer	Mechanical and Electrical Engineers	Structural Engineer	Civil Engineer & Landscape Architect	Owner	Owner		Drawing No.	
1758 ISSUE DATE 06/06/2017 – DESIGN DEVELOPMENT SET 07/10/2017 – BID SET	premier Exceptional Design ■ Legendary Results 1120 Nicollet Mall, Minneapolis, MN 55403 ph: 952-544-5800 ■ fax: 952-544-5788 premierecg.com	emanuelson-podas consulting engineers 10401 Bren Road East Minnetonka, MN 55343 ph: 952-930-0050 fax: 952-930-0777 www.epinc.net	Mattson Macdonald Young structural engineers Bassett Creek Business Center 901 North 3rd Street, Suite 100 Minneapolis, MN 55401 612-827-7825 voice 612-827-0805 fax	SRF Consulting Group, Inc.	ROSEVILLE	City of Roseville Project Cedarholm Community Building Title	I hereby certify that this drawing was prepared by me or under my direct supervision and that I am a duly licensed architect under the laws of the State of Minnesota. By: Title: Architect Date: Registration Number:	a4.2	HAGEN, CHRISTENSEN & McILWAIN ARCHITECTS 4201 CEDAR AVENUE SO. • MINNEAPOLIS, MN 55407 TEL (612)904-1932 • FAX (612)904-7886

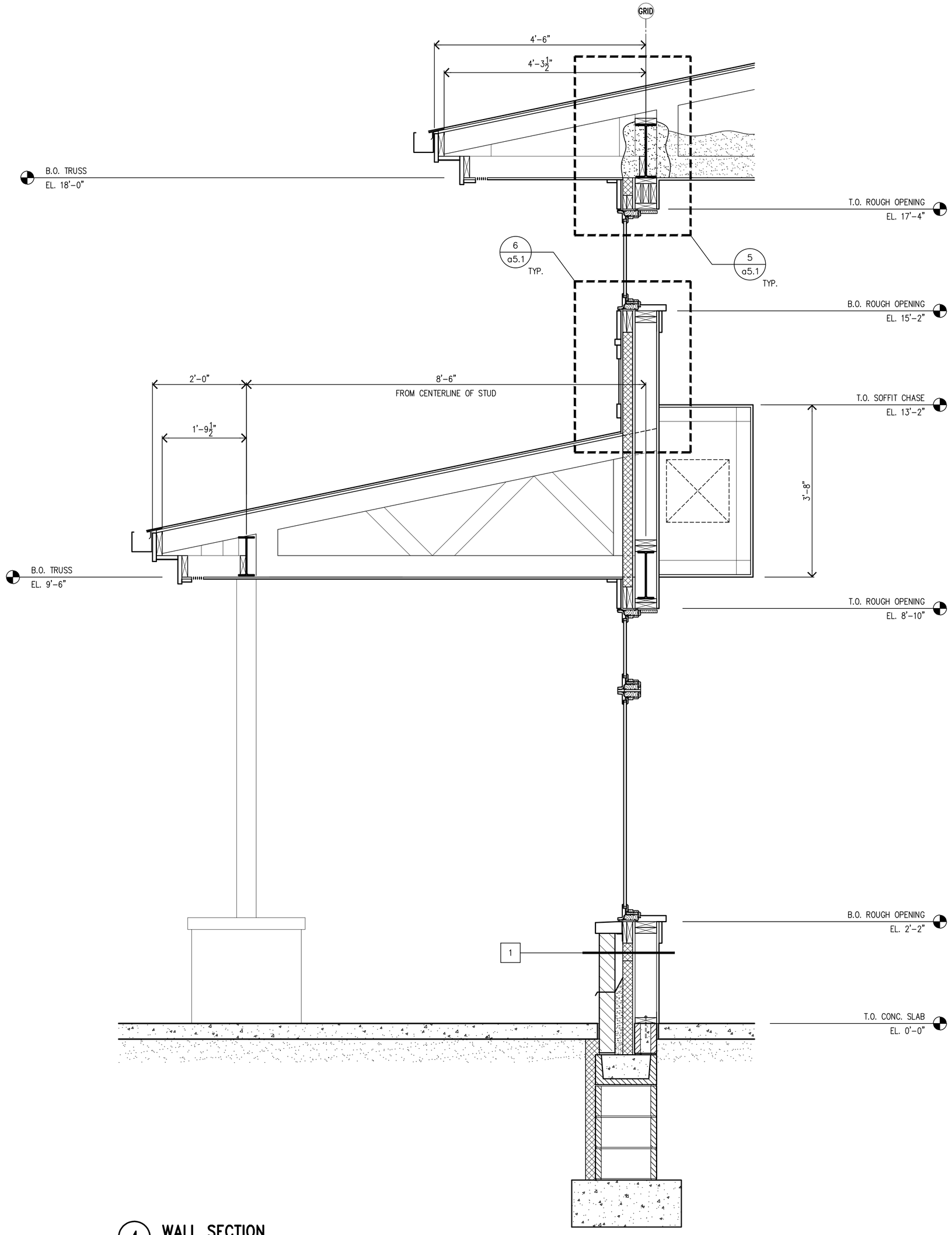

4 WALL SECTION
3/4"=1'-0"

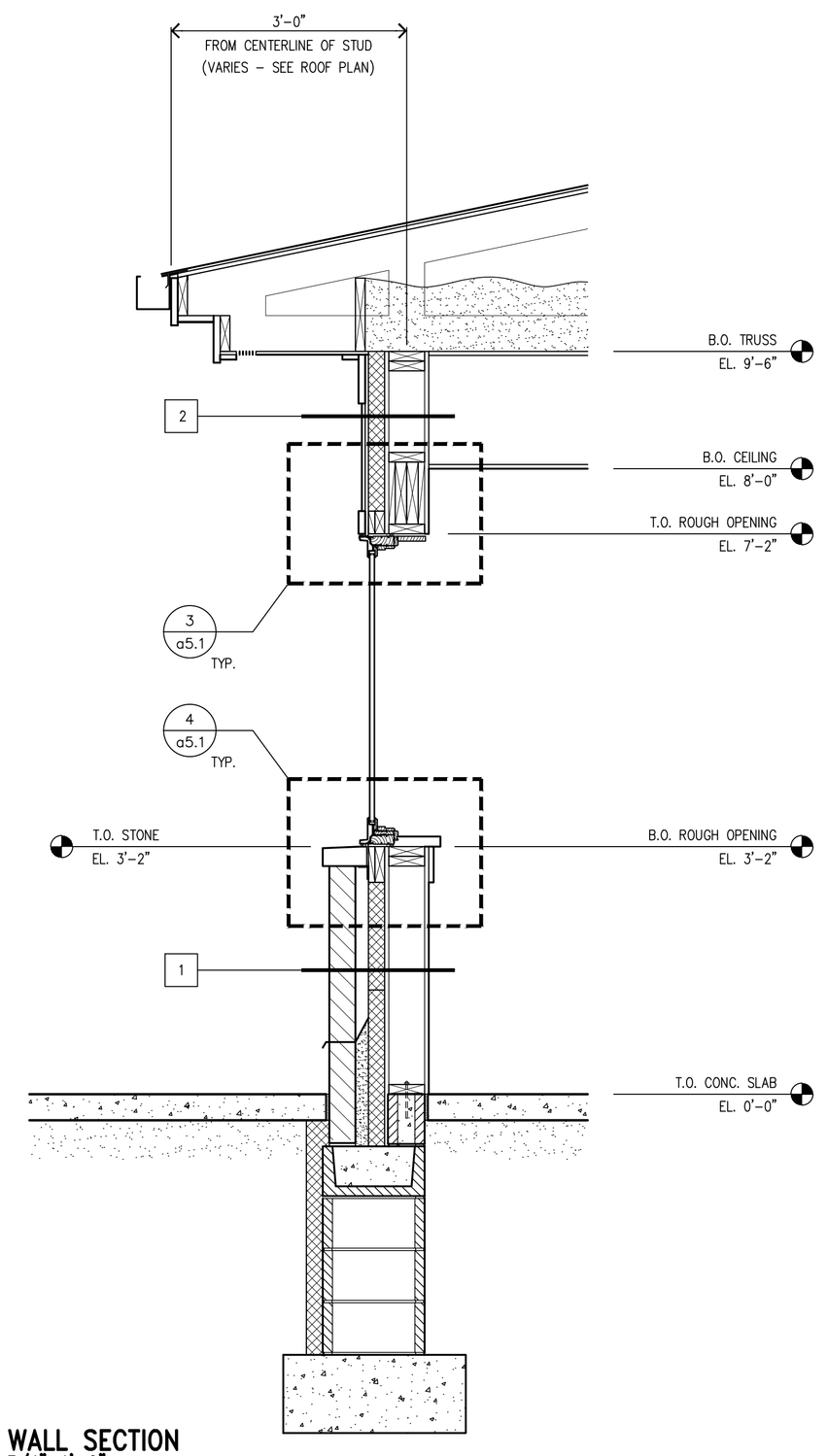

3 WALL SECTION
3/4"=1'-0"

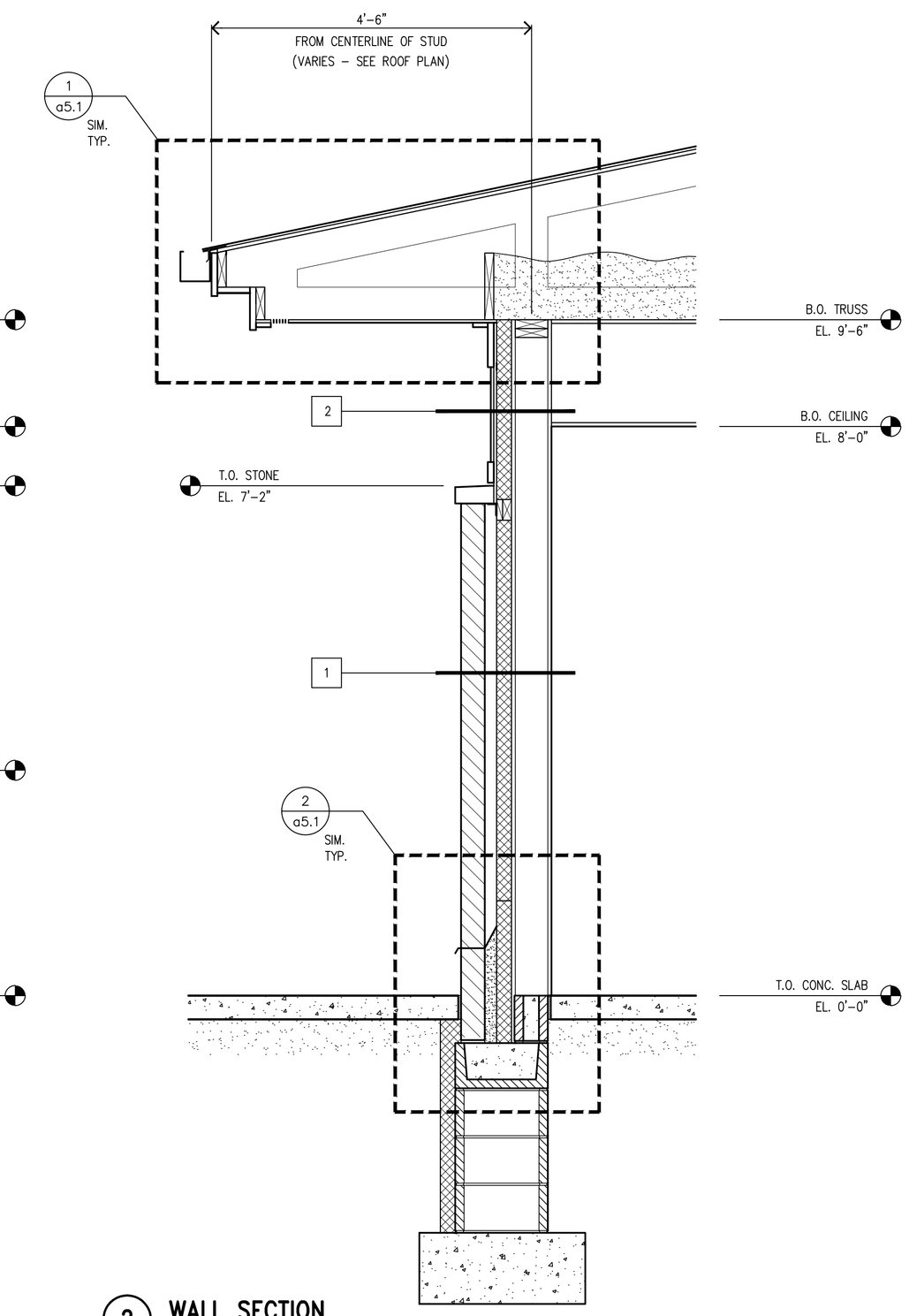

2 WALL SECTION
3/4"=1'-0"

1 EXTERIOR WALL TYPES
1-1/2"=1'-0"

Comm. No. 1758 ISSUE DATE 06/06/2017 - DESIGN DEVELOPMENT SET 07/10/2017 - BID SET	Foodservice Designer premier Exceptional Design ■ Legendary Results 1550 Northwest Highway, Suite 100 Arlington Heights, IL 60005 ph: 312-644-6800 ■ fax: 312-644-7808 premierecg.com	Mechanical and Electrical Engineers ep emanuelson-podas consulting engineers 10401 Bren Road East Minnetonka, MN 55343 ph: 952-930-0050 fax: 952-930-0777 www.epinc.net	Structural Engineer Mattson Macdonald Young structural engineers Bassett Creek Business Center 901 North 3rd Street, Suite 100 Minneapolis, MN 55401 612-827-7825 voice 612-827-0805 fax	Civil Engineer & Landscape Architect SRF Consulting Group, Inc.	Owner ROSEVILLE	Owner City of Roseville Project Cedarholm Community Building Title Wall Sections	I hereby certify that this drawing was prepared by me or under my direct supervision and that I am a duly licensed architect under the laws of the State of Minnesota. By: Title: Architect Date: Registration Number:	Drawing No. a4.3	HAGEN, CHRISTENSEN & McILWAIN ARCHITECTS 4201 CEDAR AVENUE SO. • MINNEAPOLIS, MN 55407 TEL (612)804-1932 • FAX (612)804-7388

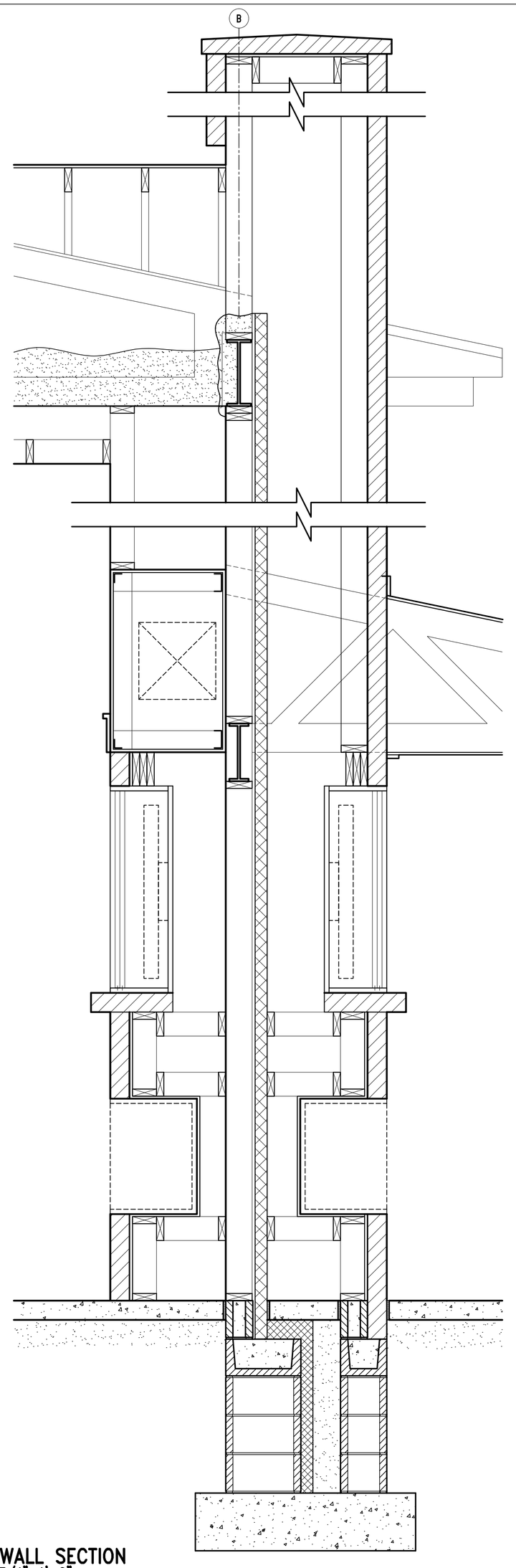

1 WALL SECTION
3/4"=1'-0"

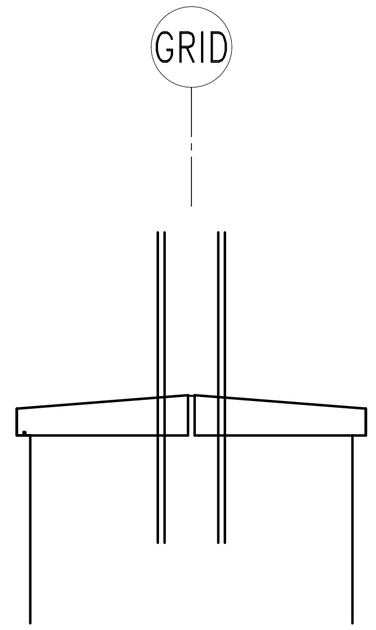

1 WALL SECTION
3/4"=1'-0"

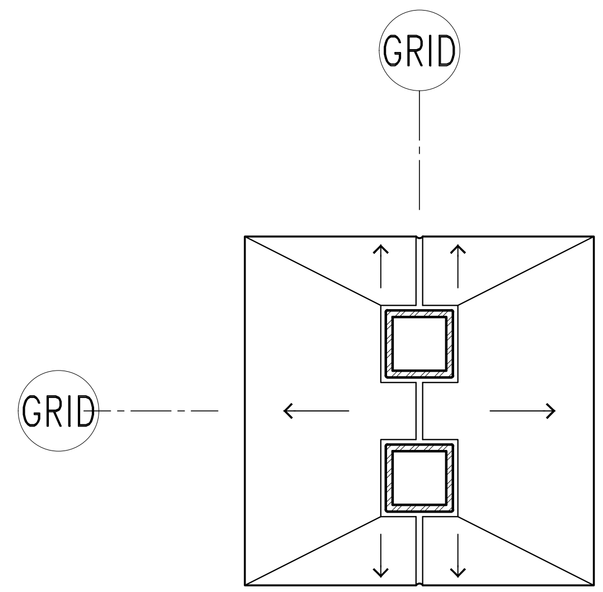

1 WALL SECTION
3/4"=1'-0"

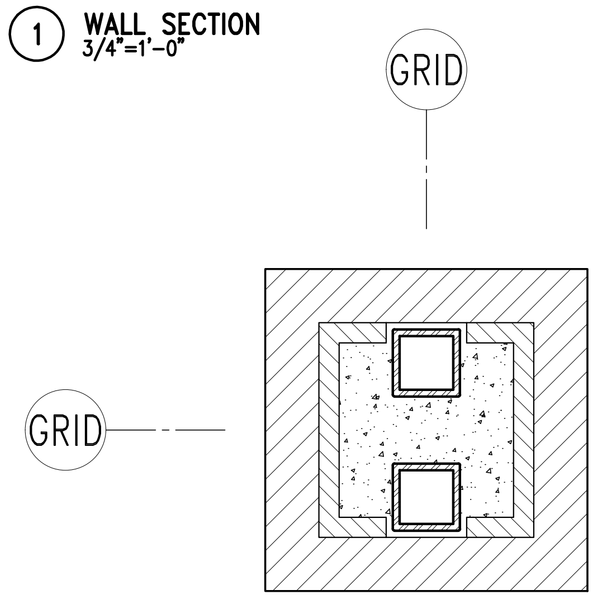

1 WALL SECTION
3/4"=1'-0"

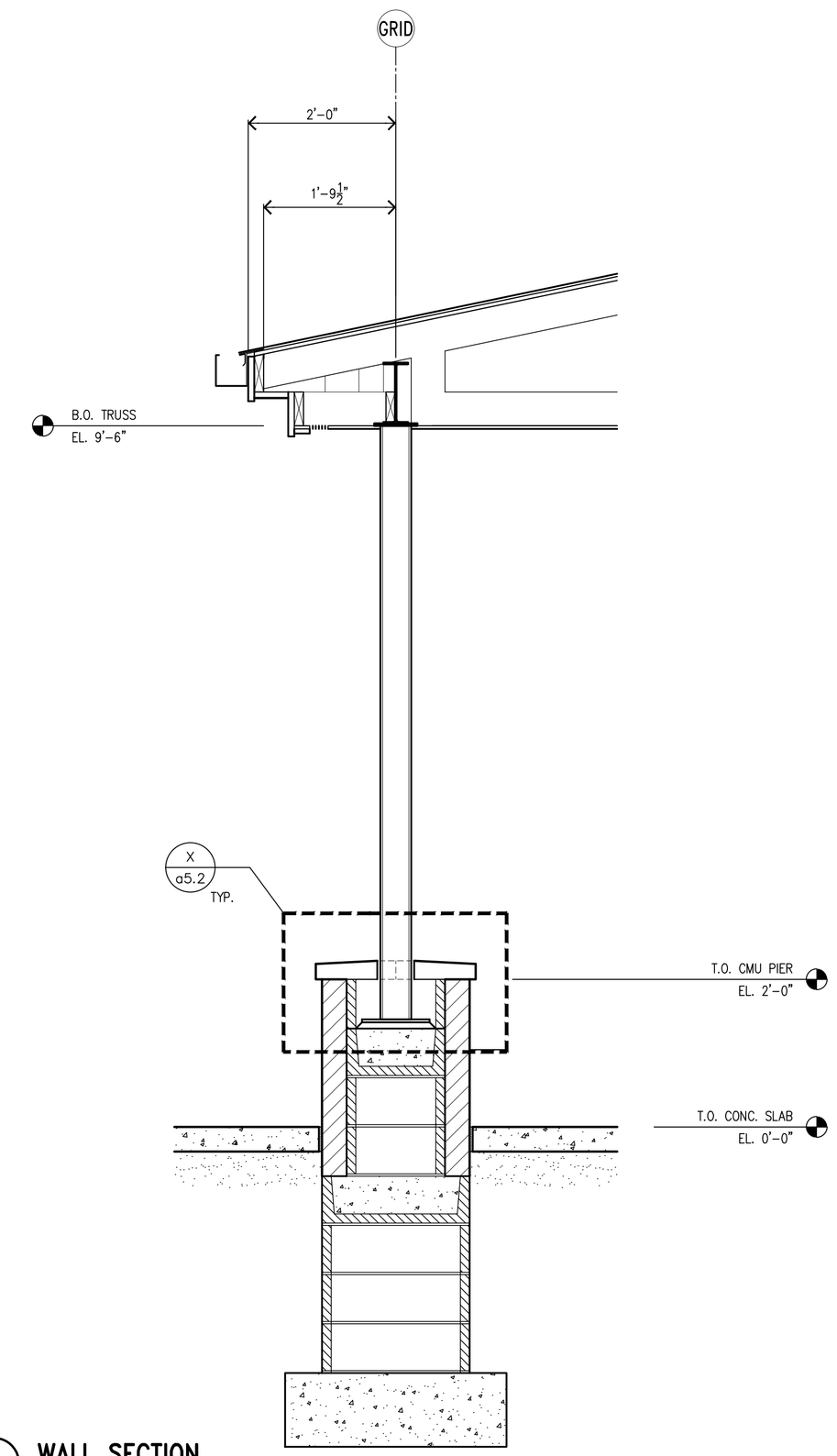

1 WALL SECTION
3/4"=1'-0"

Comm. No.	Foodservice Designer	Mechanical and Electrical Engineers	Structural Engineer	Civil Engineer & Landscape Architect	Owner	Owner	I hereby certify that this drawing was prepared by me or under my direct supervision and that I am a duly licensed architect under the laws of the State of Minnesota.	Drawing No.
1758	premier Exceptional Design ■ Legendary Results 701 Xenia Avenue South, Minneapolis, MN 55416 ph: 763-544-5600 ■ fax: 763-544-1748 premierecq.com	emanuelson-podas consulting engineers 10401 Bren Road East Minnetonka, MN 55343 ph: 952-930-0050 fax: 952-930-0777 www.epinc.net	Mattson Macdonald Young structural engineers Bassett Creek Business Center 901 North 3rd Street, Suite 100 Minneapolis, MN 55401 612-827-7825 voice 612-827-0805 fax	SRF Consulting Group, Inc.	ROSEVILLE	City of Roseville Project Cedarholm Community Building Title Wall Sections	By: Title: Architect Date: Registration Number:	a4.4

ISSUE DATE
06/06/2017 - DESIGN DEVELOPMENT SET
07/10/2017 - BID SET

HAGEN, CHRISTENSEN & McILWAIN
ARCHITECTS
4201 CEDAR AVENUE SO. • MINNEAPOLIS, MN 55407
TEL. (612)904-1332 • FAX (612) 904-7366

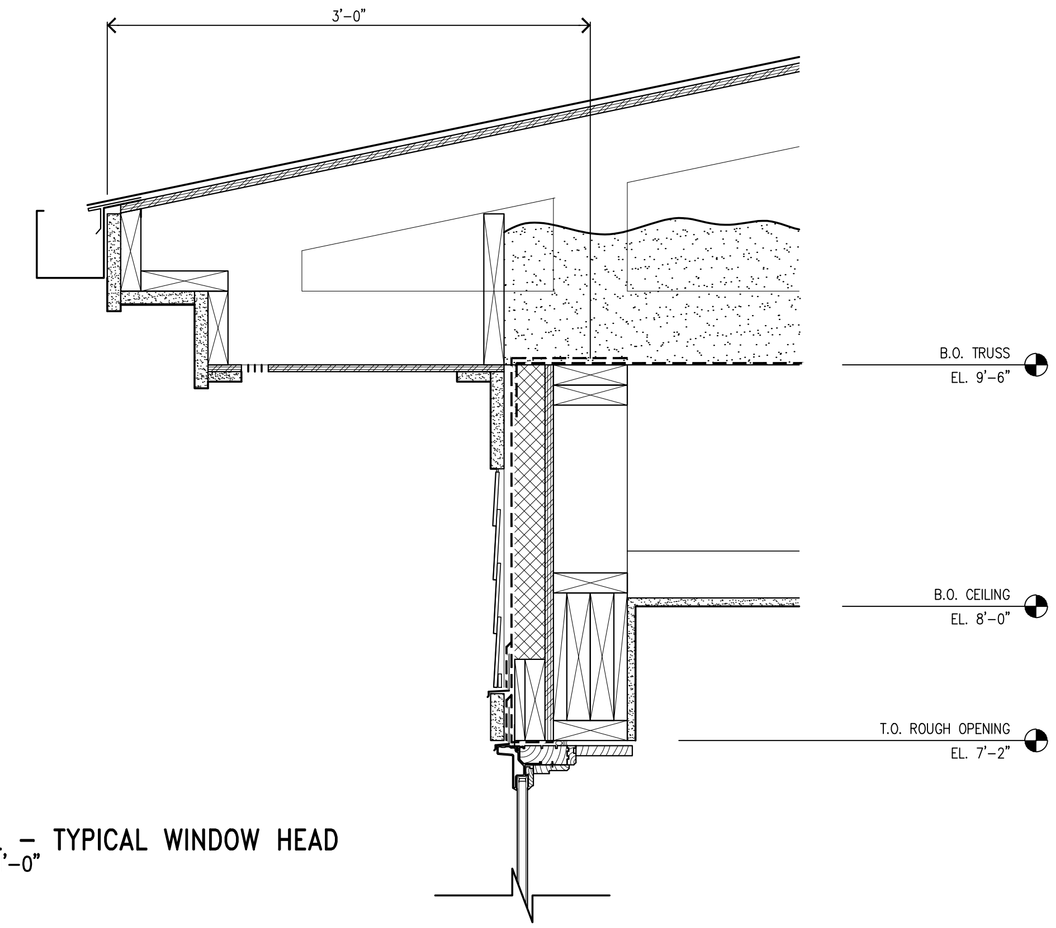

3 DETAIL – TYPICAL WINDOW HEAD
1 1/2"=1'-0"

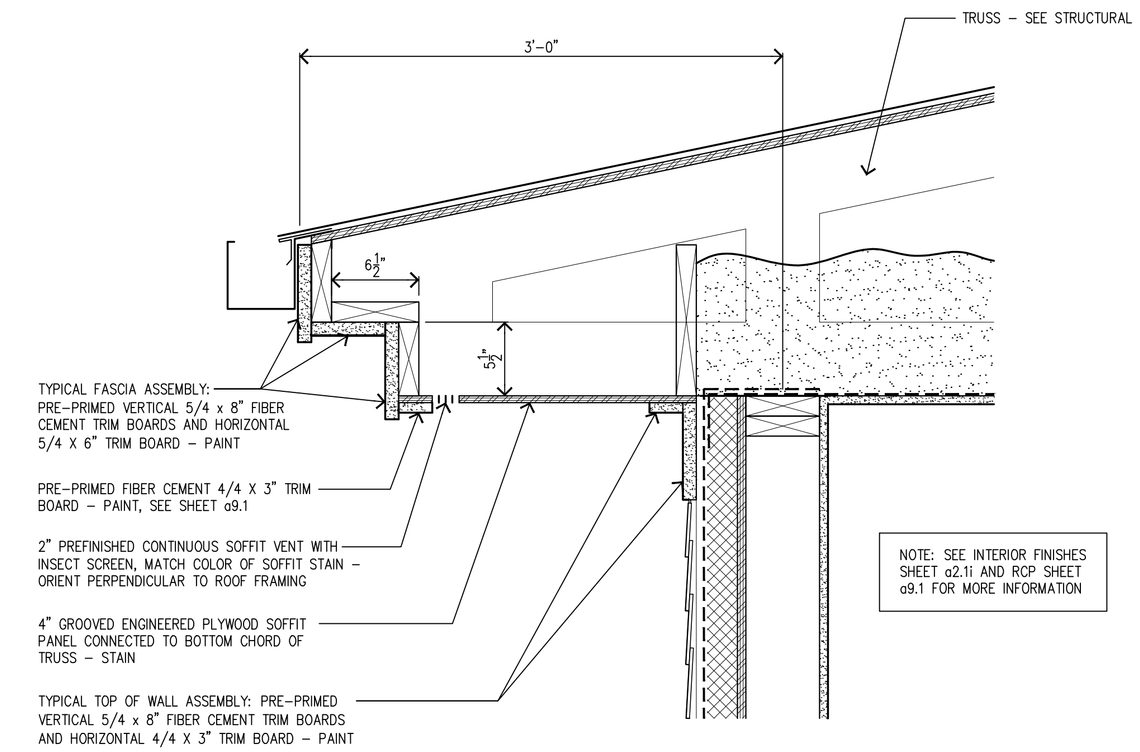

1 DETAIL – TYPICAL WALL TO ROOF TRANSITION
1 1/2"=1'-0"

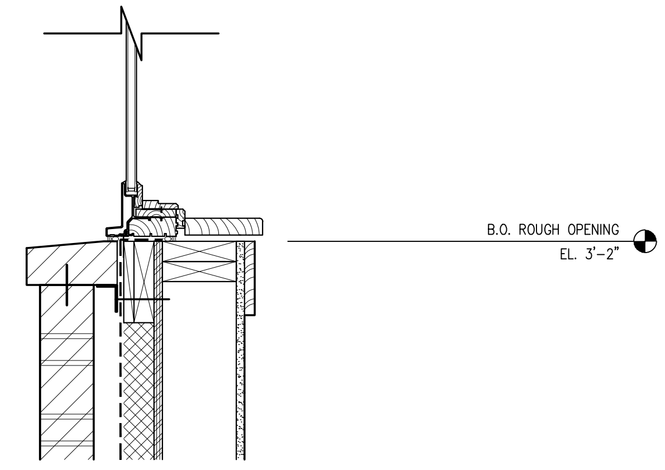

4 DETAIL – TYPICAL WINDOW SILL
1 1/2"=1'-0"

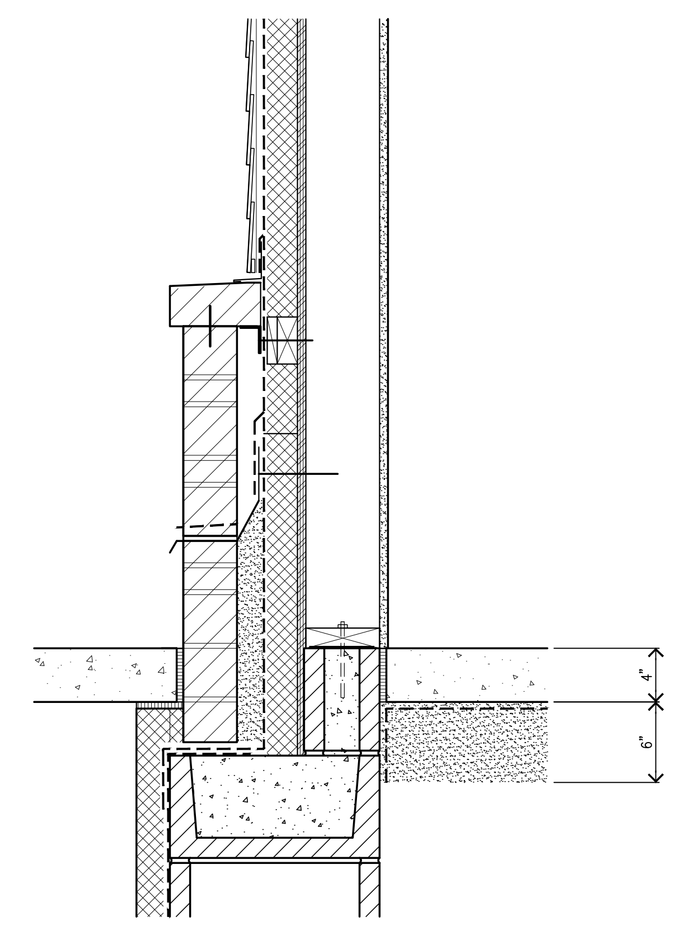

5 DETAIL – TYPICAL WINDOW JAMB
1 1/2"=1'-0"

2 DETAIL – TYPICAL WALL BASE
1 1/2"=1'-0"

Comm. No.
1758

ISSUE DATE
06/06/2017 – DESIGN DEVELOPMENT SET
07/10/2017 – BID SET

Foodservice Designer
premier
Exceptional Design ■ Legendary Results
7101 Northland Drive North, Minneapolis, MN 55428
ph: 763-533-1000 • fax: 763-533-1060
premierarq.com

Mechanical and Electrical Engineers
emanuelson-podas
consulting engineers
10401 Bren Road East
Minnetonka, MN
55343
ph: 952-930-0050
fax: 952-930-0777
www.epinc.net

Structural Engineer
Mattson Macdonald Young structural engineers
Bassett Creek Business Center
901 North 3rd Street, Suite 100
Minneapolis, MN 55401
612-827-7825 voice
612-827-0805 fax

Civil Engineer & Landscape Architect
SRF Consulting Group, Inc.

Owner
ROSEVILLE

Owner
City of Roseville
Project
Cedarholm Community Building
Title
EXTERIOR DETAILS

I hereby certify that this drawing was prepared by me or under my direct supervision and that I am a duly licensed architect under the laws of the State of Minnesota.

By:

Title: Architect Date:

Registration Number:

Drawing No.
a5.1

HAGEN, CHRISTENSEN & MCILWAIN
ARCHITECTS
4201 CEDAR AVENUE SO. • MINNEAPOLIS, MN 55407
TEL. (612)904-1332 • FAX (612)904-7366

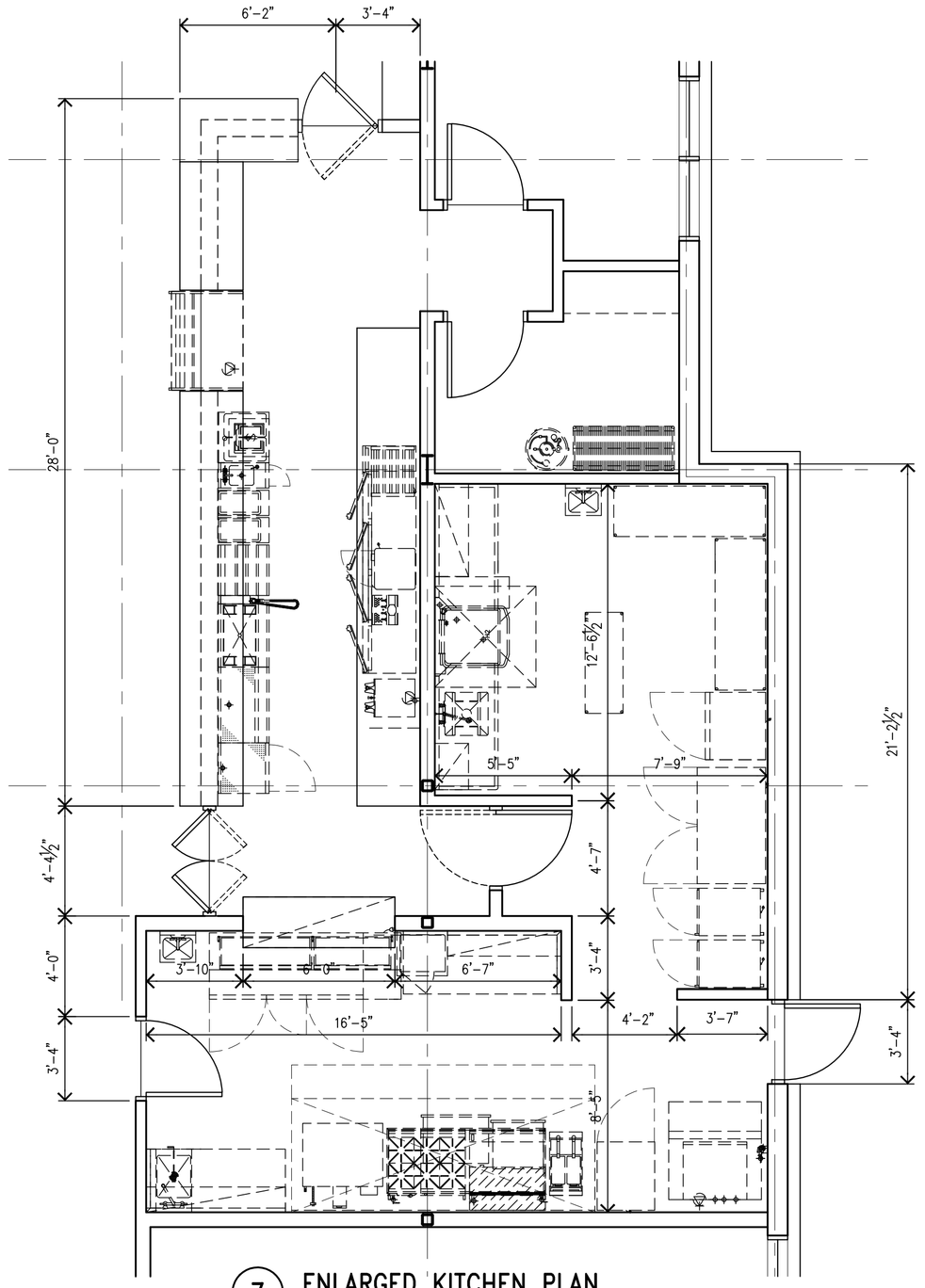

7 ENLARGED KITCHEN PLAN
1/4"=1'-0"

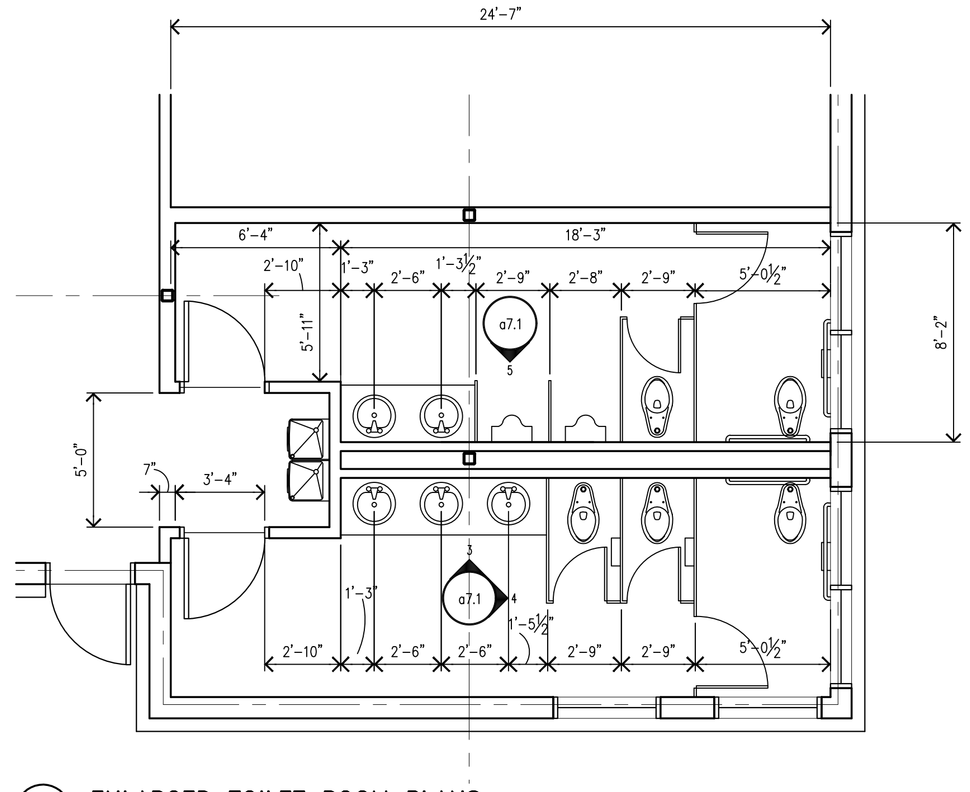

1 ENLARGED TOILET ROOM PLANS
1/4"=1'-0"

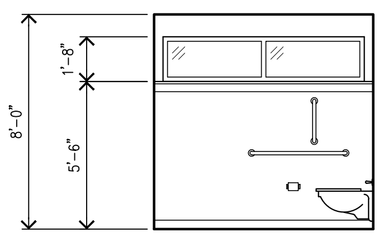

3 MEN'S – EAST ELEV.
1/4"=1'-0"

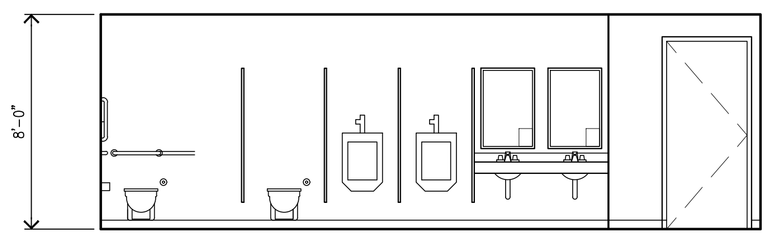

2 MEN'S – SOUTH ELEVATION
1/4"=1'-0"

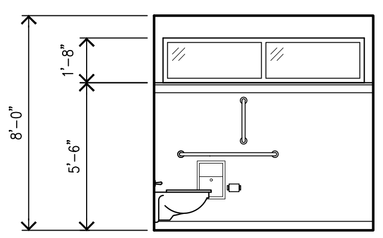

5 WOMEN'S – EAST ELEV.
1/4"=1'-0"

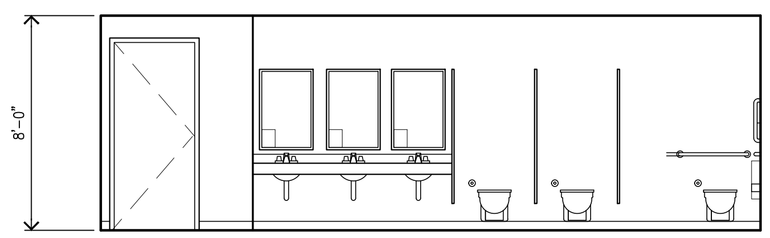

4 WOMEN'S – NORTH ELEV.
1/4"=1'-0"

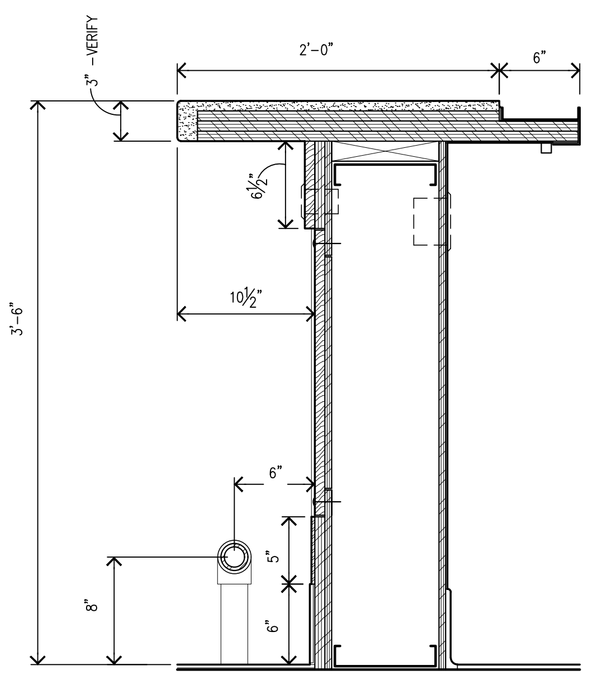

9 DETAIL – SERVICE COUNTER
1/4"=1'-0"

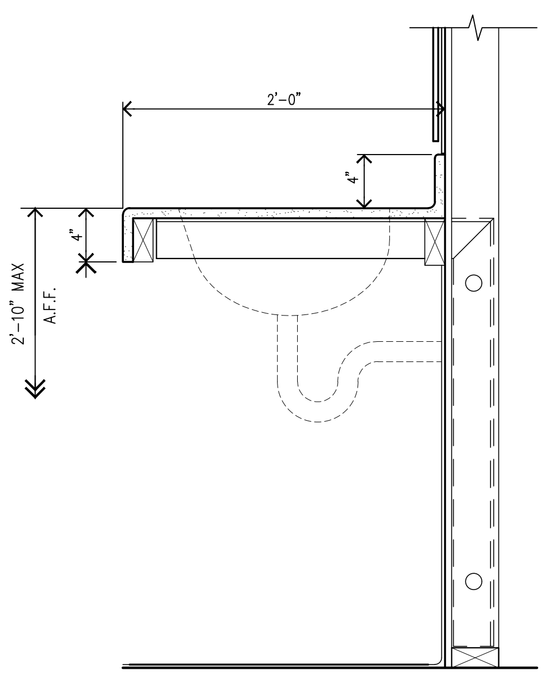

8 DETAIL – SINK COUNTERTOP
1/4"=1'-0"

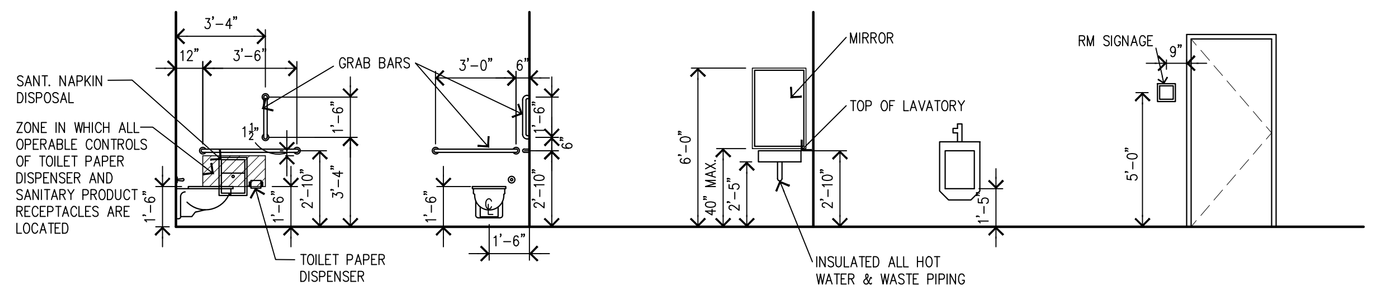

6 TYPICAL ADA REQUIREMENTS PER MN CODE
1/4"=1'-0"

INTERIOR ELEVATION GENERAL NOTES:

1. SEE PROJECT MANUAL FOR FINISH SPECIFICATIONS AND INSTALLATION INSTRUCTIONS.
2. ALL PAINTED METAL GRILLS, LOUVERS, DIFFUSERS ETC. TO BE FINISHED TO MATCH THE MATERIAL ON WHICH THEY APPEAR.
3. CEILING HEIGHTS ARE SHOWN ON REFLECTED CEILING PLANS.
4. SEE REFLECTED CEILING PLAN SHEET a9.1 FOR CEILING FINISH INFORMATION.
5. REFER TO THE INTERIOR FINISH SCHEDULE FOR ALL FINISHES IN THE TOILET ROOMS.
6. REFER TO THE DIVISION 10 SPECIFICATIONS FOR ALL TOILET ROOM ACCESSORY PRODUCT INFORMATION.
7. TRASH RECEPTACLE PROVIDED BY OWNER – N.I.C.
8. ALL TOILETS TO BE MOUNTED WITH RIM 15" A.F.F., 18" A.F.F. @ ACCESSIBLE STALL.
9. URINALS TO BE MOUNTED WITH LIP 17" A.F.F. @ ACCESSIBLE URINALS.
10. REFER TO SHEETS a2.1 FOR PARTITION TYPE KEY.

INTERIOR ELEVATION KEY NOTES: (NOT ALL NOTES USED)

1, 2, 3, 4, 5, 6, 7, 8, 9, 10, 11, 12, 13, 14, 15, 16, 17, 18, 19, 20, 21, 22, 23, 24, 25, 26, 27, 28, 29, 30, 31, 32, 33, 34, 35, 36, 37, 38, 39, 40, 41, 42, 43, 44, 45, 46

Comm. No. 1758 ISSUE DATE 06/06/2017 – DESIGN DEVELOPMENT SET 07/10/2017 – BID SET	Foodservice Designer premier Foodservice Design & Ergonomics, Interiors 7205 Northland Terrace, Minneapolis, MN 55428 ph. 763-544-5005 • fax: 763-544-7940 premierenq.com	Mechanical and Electrical Engineers emanuelson-podas consulting engineers 10401 Bren Road East Minnetonka, MN 55343 ph: 952-930-0050 fax: 952-930-0777 www.epinc.net	Structural Engineer Mattson Macdonald Young structural engineers Bassett Creek Business Center 901 North 3rd Street, Suite 100 Minneapolis, MN 55401 612-827-7825 voice 612-827-0805 fax	Civil Engineer & Landscape Architect SRF Consulting Group, Inc.	Owner ROSEVILLE	Owner City of Roseville Project Cedarholm Community Building Title Enlarged Plans, Elevations & Details	I hereby certify that this drawing was prepared by me or under my direct supervision and that I am a duly licensed architect under the laws of the State of Minnesota. By: Title: Architect Date: Registration Number:	Drawing No. a7.1	HAGEN, CHRISTENSEN & MCILWAIN ARCHITECTS 4201 CEDAR AVENUE SO. • MINNEAPOLIS, MN 55407 TEL. (612)904-1332 • FAX (612)904-7366

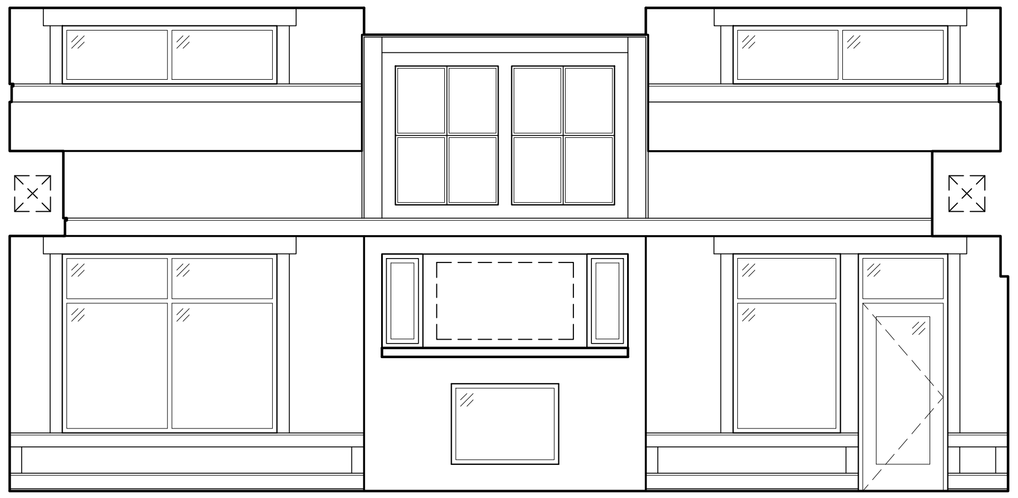

2 COMMUNITY ROOM – NORTH ELEVATION
1/4"=1'-0"

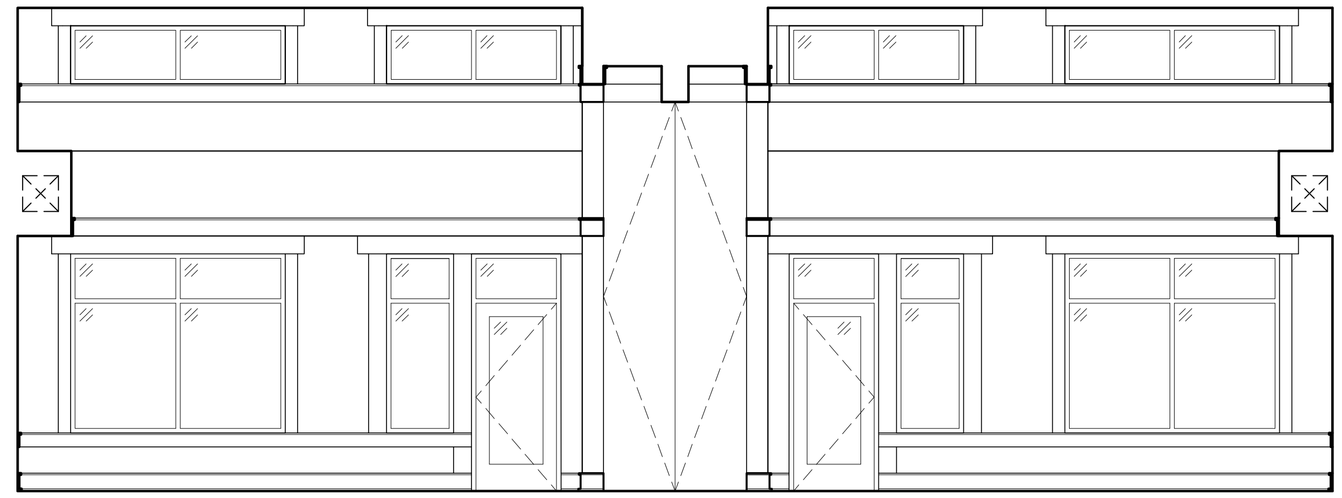

1 COMMUNITY ROOM – WEST ELEVATION
1/4"=1'-0"

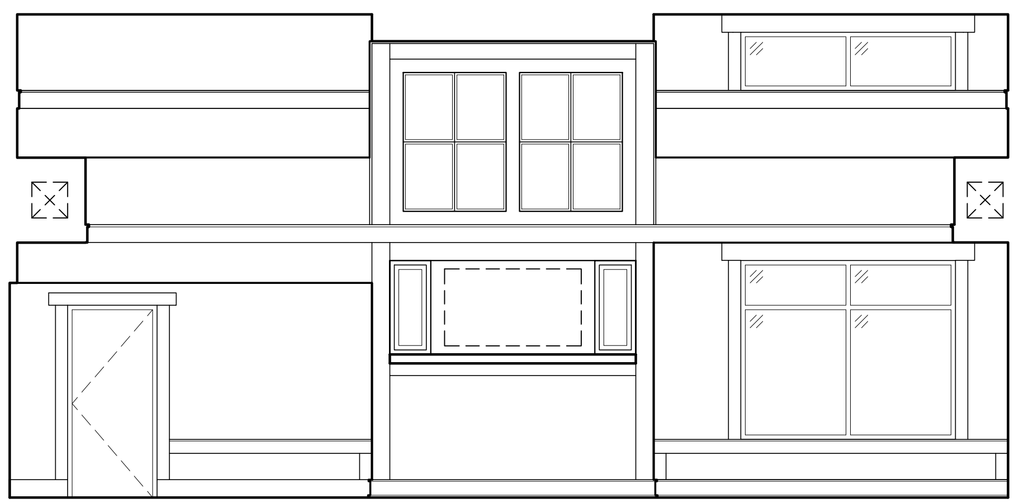

4 COMMUNITY ROOM – SOUTH ELEVATION
1/4"=1'-0"

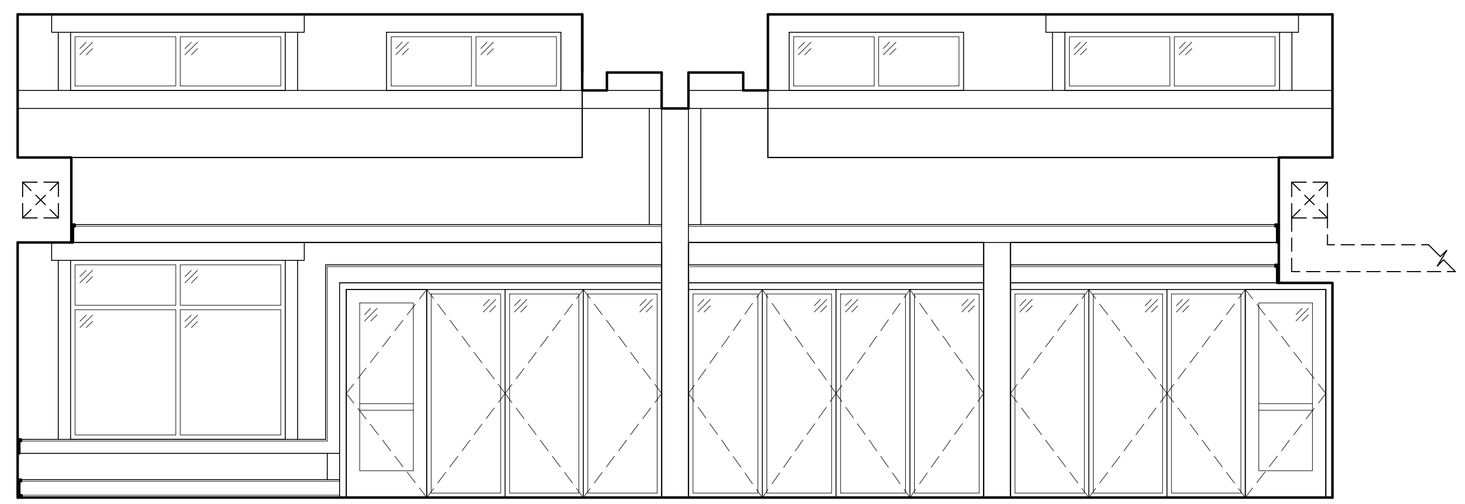

3 COMMUNITY ROOM – EAST ELEVATION
1/4"=1'-0"

INTERIOR ELEVATION GENERAL NOTES:

1. SEE PROJECT MANUAL FOR FINISH SPECIFICATIONS AND INSTALLATION INSTRUCTIONS.
2. ALL PAINTED METAL GRILLS, LOUVERS, DIFFUSERS ETC. TO BE FINISHED TO MATCH THE MATERIAL ON WHICH THEY APPEAR.
3. CEILING HEIGHTS ARE SHOWN ON REFLECTED CEILING PLANS.
4. SEE REFLECTED CEILING PLAN SHEET a9.1 FOR CEILING FINISH INFORMATION.
5. REFER TO THE INTERIOR FINISH SCHEDULE FOR ALL FINISHES IN THE TOILET ROOMS.
6. REFER TO THE DIVISION 10 SPECIFICATIONS FOR ALL TOILET ROOM ACCESSORY PRODUCT INFORMATION.
7. TRASH RECEPTACLE PROVIDED BY OWNER – N.I.C.
8. ALL TOILETS TO BE MOUNTED WITH RIM 15" A.F.F., 18" A.F.F. @ ACCESSIBLE STALL.
9. URINALS TO BE MOUNTED WITH LIP 17" A.F.F. @ ACCESSIBLE URINALS.
10. REFER TO SHEETS a2.1 FOR PARTITION TYPE KEY.

INTERIOR ELEVATION KEY NOTES: (NOT ALL NOTES USED)

1
2
3
4
5
6
7
8
9
10
11
12

Comm. No.	Foodservice Designer	Mechanical and Electrical Engineers	Structural Engineer	Civil Engineer & Landscape Architect	Owner	Owner	I hereby certify that this drawing was prepared by me or under my direct supervision and that I am a duly licensed architect under the laws of the State of Minnesota.	Drawing No.
1758	premier Foodservice Design ■ Equipment Sales 7125 Northland Terrace, Minneapolis, MN 55428 ph: 763-544-0800 ■ fax: 763-544-7940 premiereng.com	emanuelson-podas consulting engineers 10401 Bren Road East Minnetonka, MN 55343 ph: 952-930-0050 fax: 952-930-0777 www.epinc.net	Mattson Macdonald Young structural engineers Bassett Creek Business Center 901 North 3rd Street, Suite 100 Minneapolis, MN 55401 612-827-7825 voice 612-827-0805 fax	SRF Consulting Group, Inc.	ROSEVILLE	City of Roseville Project Cedarholm Community Building Title Interior Elevations	By: Title: Architect Date: Registration Number:	a7.2

ISSUE DATE
06/06/2017 – DESIGN DEVELOPMENT SET
07/10/2017 – BID SET

HAGEN, CHRISTENSEN & McILWAIN
ARCHITECTS
4201 CEDAR AVENUE SO. • MINNEAPOLIS, MN 55407
TEL. (612)824-1932 • FAX (612)824-7388

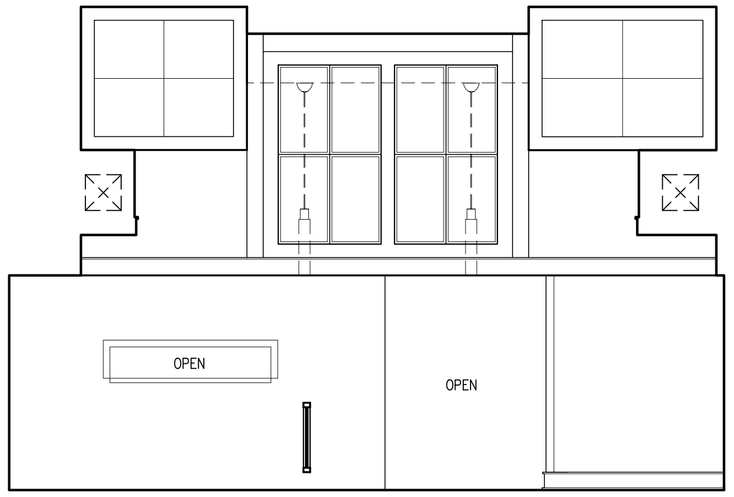

2 SOUTH ELEVATION
1/4"=1'-0"

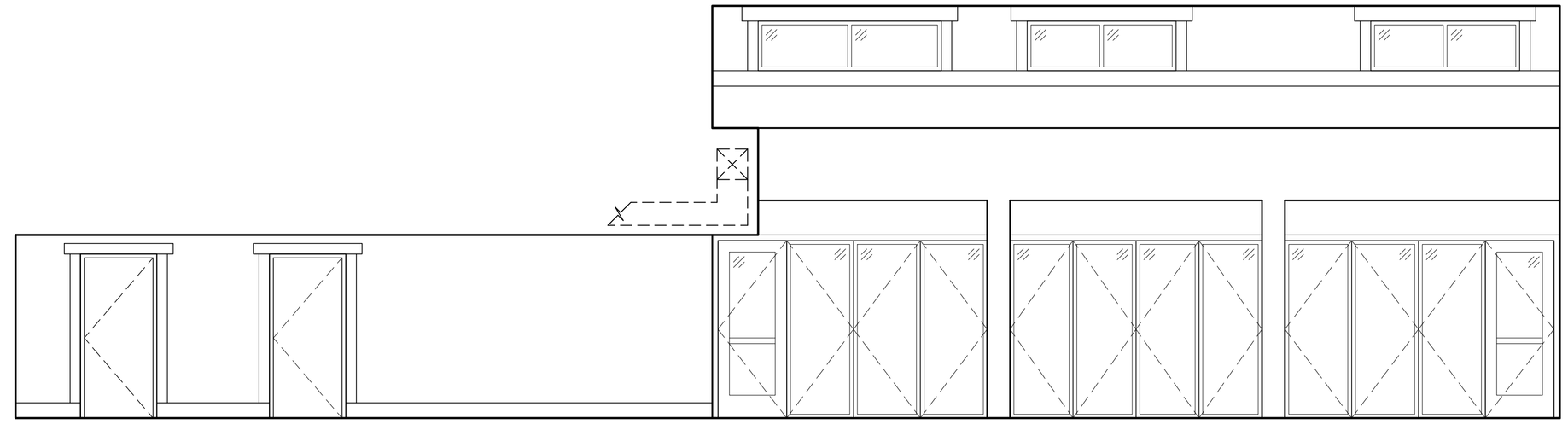

1 WEST ELEVATION
1/4"=1'-0"

4 NORTH ELEVATION
1/4"=1'-0"

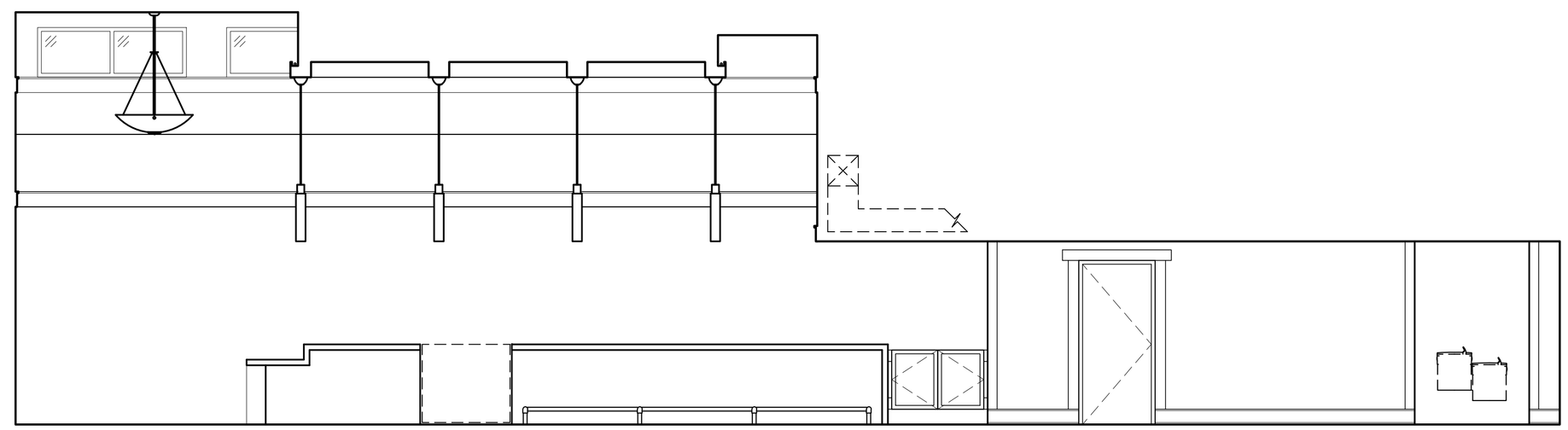

3 EAST ELEVATION - COUNTER
1/4"=1'-0"

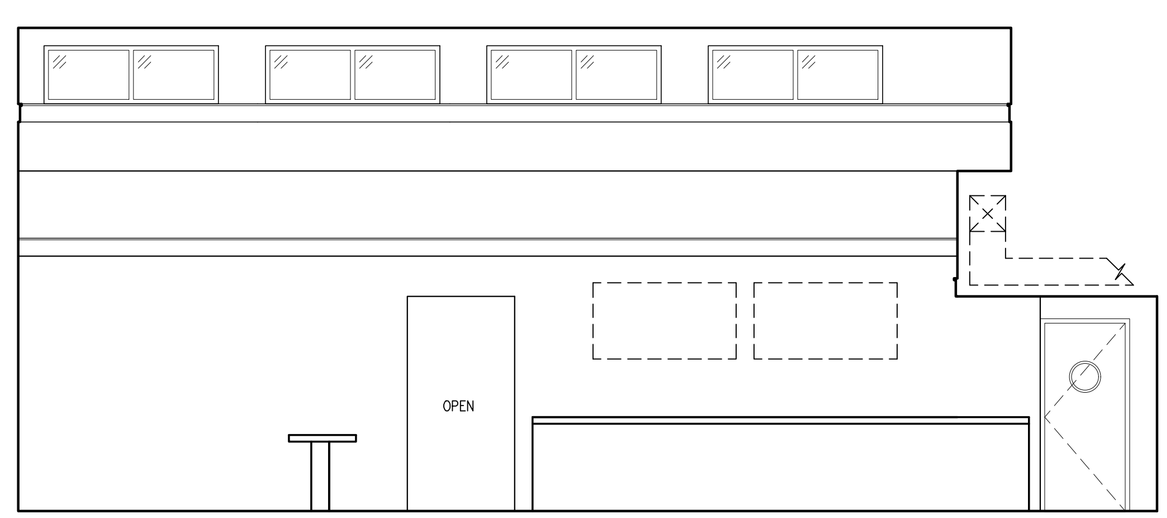

6 EAST ELEVATION - BACK COUNTER
1/4"=1'-0"

5 PARTIAL ELEVATION - ADA COUNTER
1/4"=1'-0"

INTERIOR ELEVATION GENERAL NOTES:

1. SEE PROJECT MANUAL FOR FINISH SPECIFICATIONS AND INSTALLATION INSTRUCTIONS.
2. ALL PAINTED METAL GRILLS, LOUVERS, DIFFUSERS ETC. TO BE FINISHED TO MATCH THE MATERIAL ON WHICH THEY APPEAR.
3. CEILING HEIGHTS ARE SHOWN ON REFLECTED CEILING PLANS.
4. SEE REFLECTED CEILING PLAN SHEET a9.1 FOR CEILING FINISH INFORMATION.
5. REFER TO THE INTERIOR FINISH SCHEDULE FOR ALL FINISHES IN THE TOILET ROOMS.
6. REFER TO THE DIVISION 10 SPECIFICATIONS FOR ALL TOILET ROOM ACCESSORY PRODUCT INFORMATION.
7. TRASH RECEPTACLE PROVIDED BY OWNER - N.I.C.
8. ALL TOILETS TO BE MOUNTED WITH RIM 15" A.F.F., 18" A.F.F. @ ACCESSIBLE STALL.
9. URINALS TO BE MOUNTED WITH LIP 17" A.F.F. @ ACCESSIBLE URINALS.
10. REFER TO SHEETS a2.1 FOR PARTITION TYPE KEY.

INTERIOR ELEVATION KEY NOTES: (NOT ALL NOTES USED)

1
2
3
4
5
6
7
8
9
10
11
12

Comm. No.	Foodservice Designer	Mechanical and Electrical Engineers	Structural Engineer	Civil Engineer & Landscape Architect	Owner	Owner / Project / Title		Drawing No.
1758 ISSUE DATE 06/06/2017 - DESIGN DEVELOPMENT SET 07/10/2017 - BID SET	premier A Foodservice Design & Equipment Company 7500 Bestwood Terrace, Minneapolis, MN 55426 ph: 763-544-0800 • fax: 763-544-7949 premierinc.com	emanuelson-podas consulting engineers 10401 Bren Road East Minnetonka, MN 55343 ph: 952-930-0050 fax: 952-930-0777 www.epinc.net	Mattson Macdonald Young structural engineers Bassett Creek Business Center 901 North 3rd Street, Suite 100 Minneapolis, MN 55401 612-827-7825 voice 612-827-0805 fax	SRF Consulting Group, Inc.	ROSEVILLE	City of Roseville Cedarholm Community Building Interior Elevations	I hereby certify that this drawing was prepared by me or under my direct supervision and that I am a duly licensed architect under the laws of the State of Minnesota. By: Title: Architect Date: Registration Number:	a7.3

HAGEN, CHRISTENSEN & McILWAIN
ARCHITECTS
4201 CEDAR AVENUE SO. • MINNEAPOLIS, MN 55407
TEL. (612)904-1392 • FAX (612)904-7388

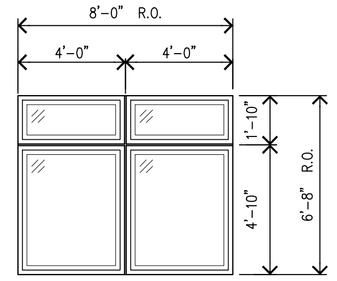

W1
CLAD WOOD
APWxxxx

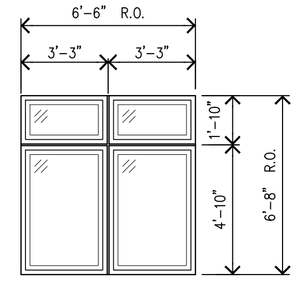

W2
CLAD WOOD
APWxxxx

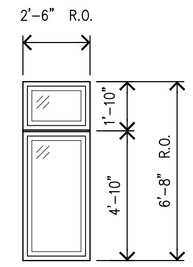

W3
CLAD WOOD
APWxxxx

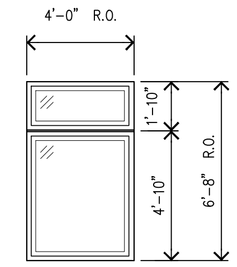

W4
CLAD WOOD
APWxxxx

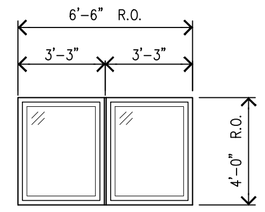

W5
CLAD WOOD
APWxxxx

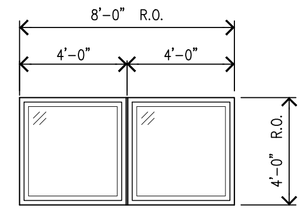

W6
CLAD WOOD
APWxxxx

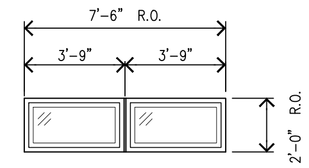

W7
CLAD WOOD
TRANSLUCENT GLAZING
APWxxxx

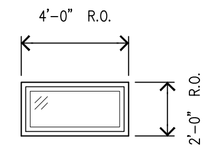

W8
CLAD WOOD
TRANSLUCENT GLAZING
APWxxxx

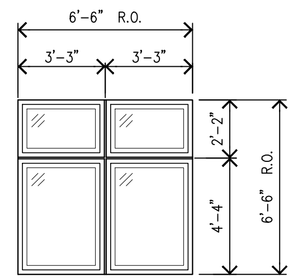

W9
CLAD WOOD
APWxxxx

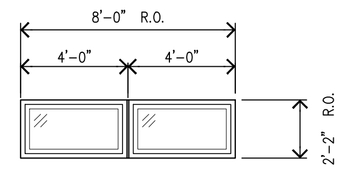

W10
CLAD WOOD
APWxxxx

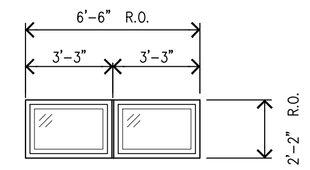

W11
CLAD WOOD
APWxxxx

EXTERIOR WINDOW TYPES (ALL WINDOWS FIXED)

NOTE:
- BASIS OF DESIGN: ANDERSEN E-SERIES PREFINISHED METAL CLAD WOOD CLAD WINDOWS
- WOOD STAIN FINISH TO MATCH ARCHITECTS SAMPLE
- SEE TYPICAL DETAILS ON SHEET a5.1

DOOR & OPENING SCHEDULE

DOOR NUMBER	DOOR SIZE (WxH)	DOOR TYPE	FRAME SIZE (WxH)	CARD READER	FRAME TYPE	HARDWARE GROUP	REMARKS
100A	3'-0" x 7'-0"	D	3'-0" x 7'-0"		1		
100B	3'-0" x 7'-0"	B	3'-4" x 7'-2"		2		
100C	3'-0" x 7'-0"	C	3'-4" x 7'-2"		3		
101A	3'-0" x 7'-0"	D	3'-4" x 7'-2"		3		
101B	3'-0" x 7'-0"	B	3'-0" x 7'-0"		3		
102	3'-0" x 7'-0"	B	3'-4" x 7'-2"		3		
103	3'-0" x 7'-0"	A	3'-4" x 7'-2"		4		
104	3'-0" x 7'-0"	A	3'-4" x 7'-2"		3		
105	3'-0" x 7'-0"	A	3'-4" x 7'-2"		3		
106A	3'-0" x 7'-0"	C	3'-4" x 7'-2"		3		
106B	3'-0" x 7'-0"	A	3'-4" x 7'-2"		3		
107	3'-0" x 7'-0"	A	3'-4" x 7'-2"		3		INSUL. EXTERIOR DOOR
108	3'-0" x 7'-0"	A	3'-4" x 7'-2"				
109	3'-0" x 7'-0"	C	3'-4" x 7'-2"				
110	3'-0" x 7'-0"	A	3'-4" x 7'-2"				
111A	3'-0" x 7'-0"	A	3'-4" x 7'-2"				
111B	3'-0" x 7'-0"	A	3'-4" x 7'-2"				

DOOR AND HARDWARE NOTES

A. ALL NEW HARDWARE TO BE LEVER TYPE ACCESSIBLE. CONTRACTOR TO PROVIDE HARDWARE SCHEDULE FOR REVIEW AND APPROVAL BY OWNER AND ARCHITECT.

B. ALL HARDWARE GROUPS TO BE PER MN ACCESSIBILITY STANDARDS

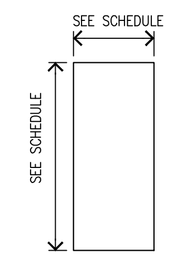

DOOR TYPE A
SOLID WOOD

SPECIES: DOUGLAS FIR – STAIN

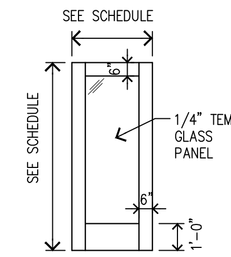

DOOR TYPE B
SOLID WOOD

SPECIES: DOUGLAS FIR – STAIN

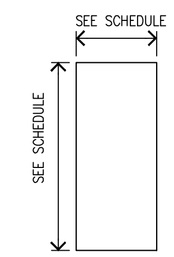

DOOR TYPE C
HOLLOW METAL – PAINT.

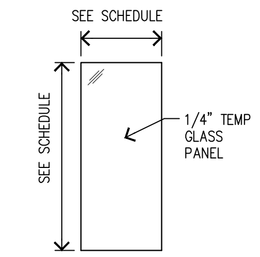

DOOR TYPE D
GLASS

DOOR TYPES

NOTE:
- WOOD STAIN FINISH TO MATCH ARCHITECT'S SAMPLE.
- SEE i2.1 FOR ADD'L FINISH INFO.
- ALL GLASS TO BE TEMPERED AS REQ'D BY LOCAL AND NATIONAL CODE.

NOTE:
CONTRACTOR TO VERIFY ALL DOOR/FRAME SIZES AND ROUGH OPENING SIZES W/DOOR SUPPLIER PRIOR TO FRAMING

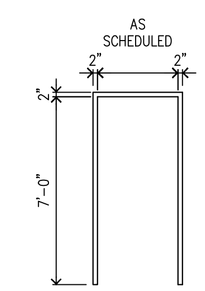

FRAME TYPE 1
HOLLOW METAL,
PAINT

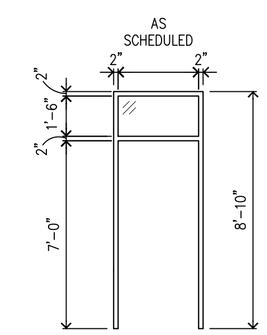

FRAME TYPE 2
ALUMINUM STOREFRONT,
PREFINISHED

DOOR FRAME TYPES

NOTE:
- CLAD WOOD FRAME BASIS OF DESIGN (APPROVED EQUAL): ANDERSEN E-SERIES: CLAD HINGED PATIO DOORS – OUTSWING
- WOOD FRAMES TO BE TO BE CLEAR PINE W/ STAIN FINISH TO MATCH ARCHITECTS SAMPLE.
- SEE i2.1 FOR ADD'L FINISH INFO.
- SEE TYPICAL DETAILS ON SHEET a5.2

NOTE:
CONTRACTOR TO VERIFY ALL DOOR/FRAME SIZES AND ROUGH OPENING SIZES W/DOOR SUPPLIER PRIOR TO FRAMING

Comm. No.
1758

ISSUE DATE
06/06/2017 – DESIGN DEVELOPMENT SET
07/10/2017 – BID SET

Foodservice Designer
premier
Exceptional Design ■ Superior Results
7101 Northland Terrace, Minneapolis, MN 55428
ph: (763) 533-4450 fax: (763) 533-4460
premierinc.com

Mechanical and Electrical Engineers
emanuelson-podas
consulting engineers
10401 Bren Road East
Minnetonka, MN
55343
ph: 952-930-0050
fax: 952-930-0777
www.epinc.net

Structural Engineer
Mattson Macdonald Young structural engineers
Bassett Creek Business Center
901 North 3rd Street, Suite 100
Minneapolis, MN 55401
612-827-7825 voice
612-827-0805 fax

Civil Engineer & Landscape Architect
SRF Consulting Group, Inc.

Owner
ROSEVILLE

Owner
City of Roseville
Project
Cedarholm Community Building
Title
DOOR AND WINDOW TYPES

I hereby certify that this drawing was prepared by me or under my direct supervision and that I am a duly licensed architect under the laws of the State of Minnesota.

By:

Title: Architect Date:

Registration Number:

Drawing No.
a8.1

HAGEN, CHRISTENSEN & MCILWAIN
ARCHITECTS
4201 CEDAR AVENUE SO. • MINNEAPOLIS, MN 55407
TEL (612)904-1332 • FAX (612)904-7366

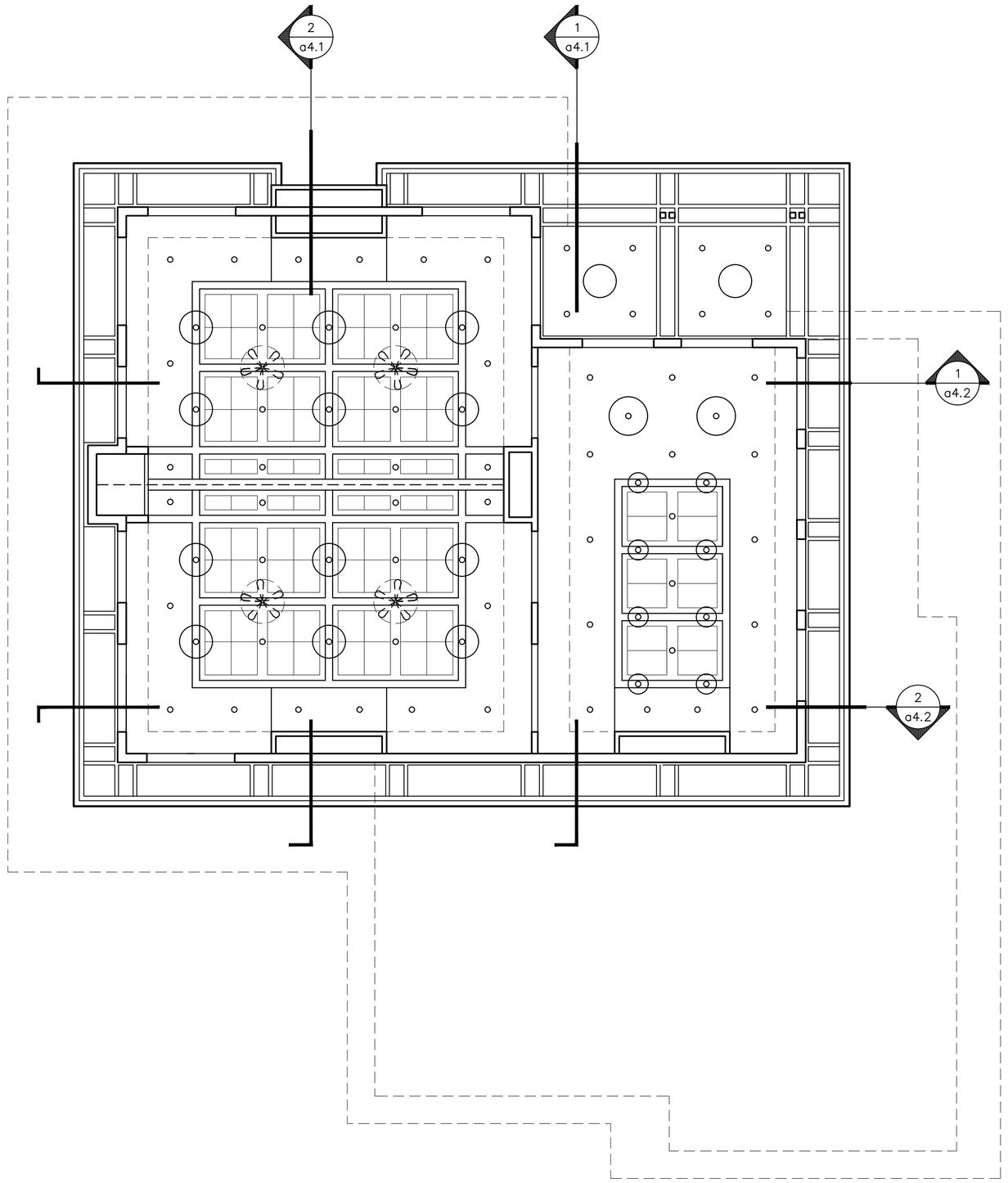

2 REFLECTED CEILING PLAN – HIGH
1/8"=1'-0"

NORTH

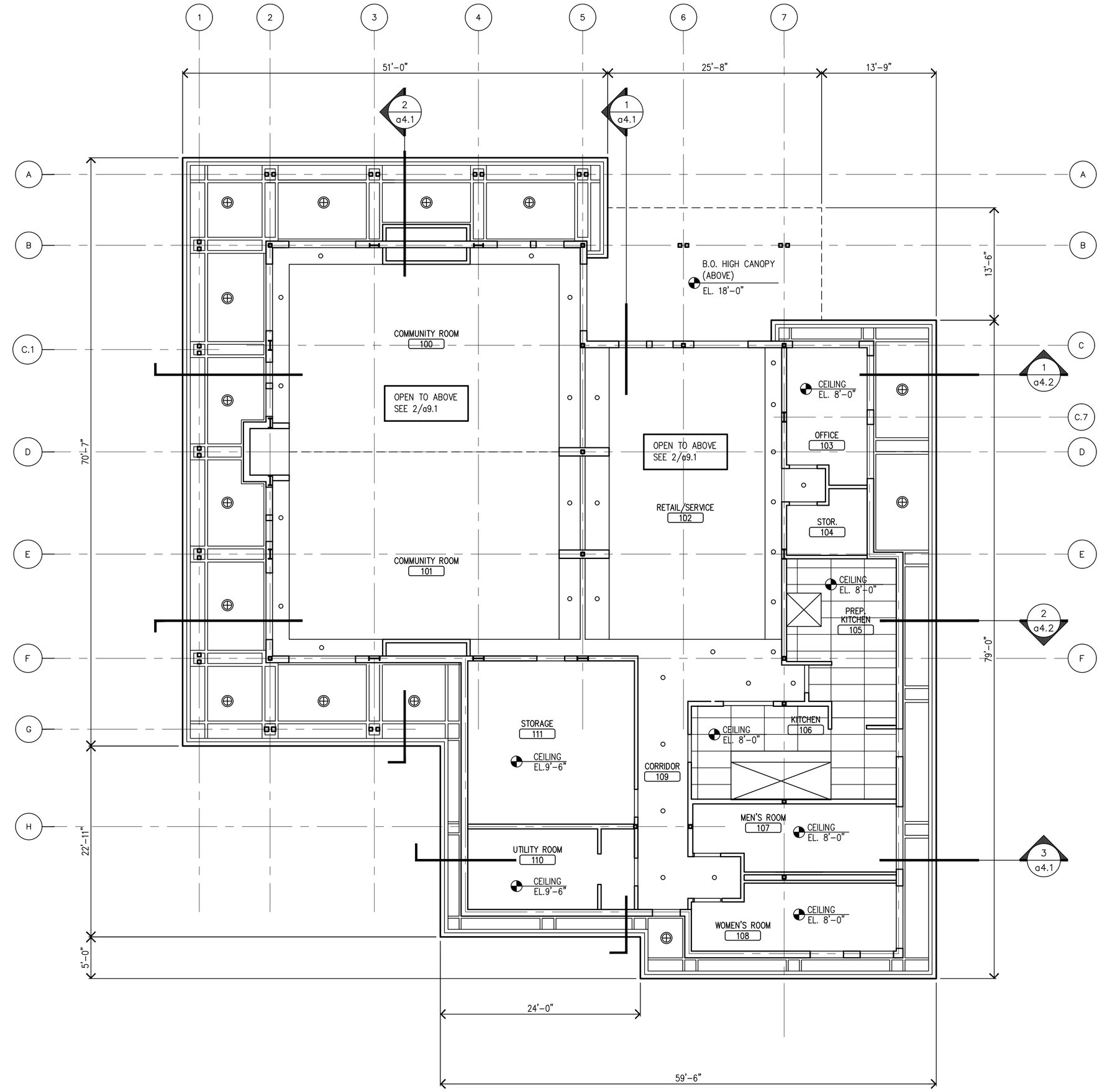

1 REFLECTED CEILING PLAN – LOW
1/8"=1'-0"

NORTH

GENERAL RCP NOTES:

1. SEE MECHANICAL AND ELECTRICAL DRAWINGS FOR FIXTURE TYPES AND QUANTITIES
2. SEE ELECTRICAL DRAWINGS FOR EMERGENCY EXIT LIGHTS AND SIGNAGE
3. ALL GYP. BOARD CEILINGS / SOFFITS TO BE PAINTED

RCP SYMBOL KEY

RCP KEY NOTES

1. GYP. BOARD CEILING ASSEMBLY – PAINT
2. SUSPENDED 2 X 2 VINYL CEILING TILE SYSTEM
3. COFFERED CEILING ASSEMBLY – GYP. BOARD PAN WITH DECORATIVE 1" THICK FABRIC WRAPPED ACOUSTIC PANELS
4. COFFERED CEILING ASSEMBLY – WOOD BEAM (STAIN)
5. FOLDABLE PARTITION WALL TRACK ASSEMBLY
6. FIR PANEL CEILING WITH V-GROOVES @ 4" O.C. – STAIN
7. GYP. BOARD AND WOOD TRIM SOFFIT ASSEMBLY
8. FOLDABLE GLASS PARTITION WALL TRACK ASSEMBLY
9. GAS FIREPLACE AND CHIMNEY ASSEMBLY
10. FOLDABLE PARTITION WALL POCKET ASSEMBLY WITH GYP. BOARD INTERIOR LID
11. PRE-PRIMED FIBER CEMENT TRIM BOARD FASCIA ASSEMBLY – PAINT

Comm. No.
1758

ISSUE DATE
06/06/2017 – DESIGN DEVELOPMENT SET
07/10/2017 – BID SET

Foodservice Designer
premier
Exceptional Design ■ Logistics ■ Results
7001 Northland Terrace, Minneapolis, MN 55428
ph: 763 544-0500 fax: 763 544-1940
premierdg.com

Mechanical and Electrical Engineers
emanuelson-podas
consulting engineers
10401 Bren Road East
Minnetonka, MN
55343
ph: 952-930-0050
fax: 952-930-0777
www.epinc.net

Structural Engineer
Mattson Macdonald Young structural engineers
Bassett Creek Business Center
901 North 3rd Street, Suite 100
Minneapolis, MN 55401
612-827-7925 voice
612-827-0805 fax

Civil Engineer & Landscape Architect
SRF Consulting Group, Inc.

Owner
ROSEVILLE

Owner
City of Roseville
Project
Cedarholm Community Building
Title
Reflected Ceiling Plan

I hereby certify that this drawing was prepared by me or under my direct supervision and that I am a duly licensed architect under the laws of the State of Minnesota.

By:

Title: Architect Date:

Registration Number:

Drawing No.
a9.1

HAGEN, CHRISTENSEN & McILWAIN
ARCHITECTS
4201 CEDAR AVENUE SO. • MINNEAPOLIS, MN 55407
TEL (612)804-1332 • FAX (612)804-7366

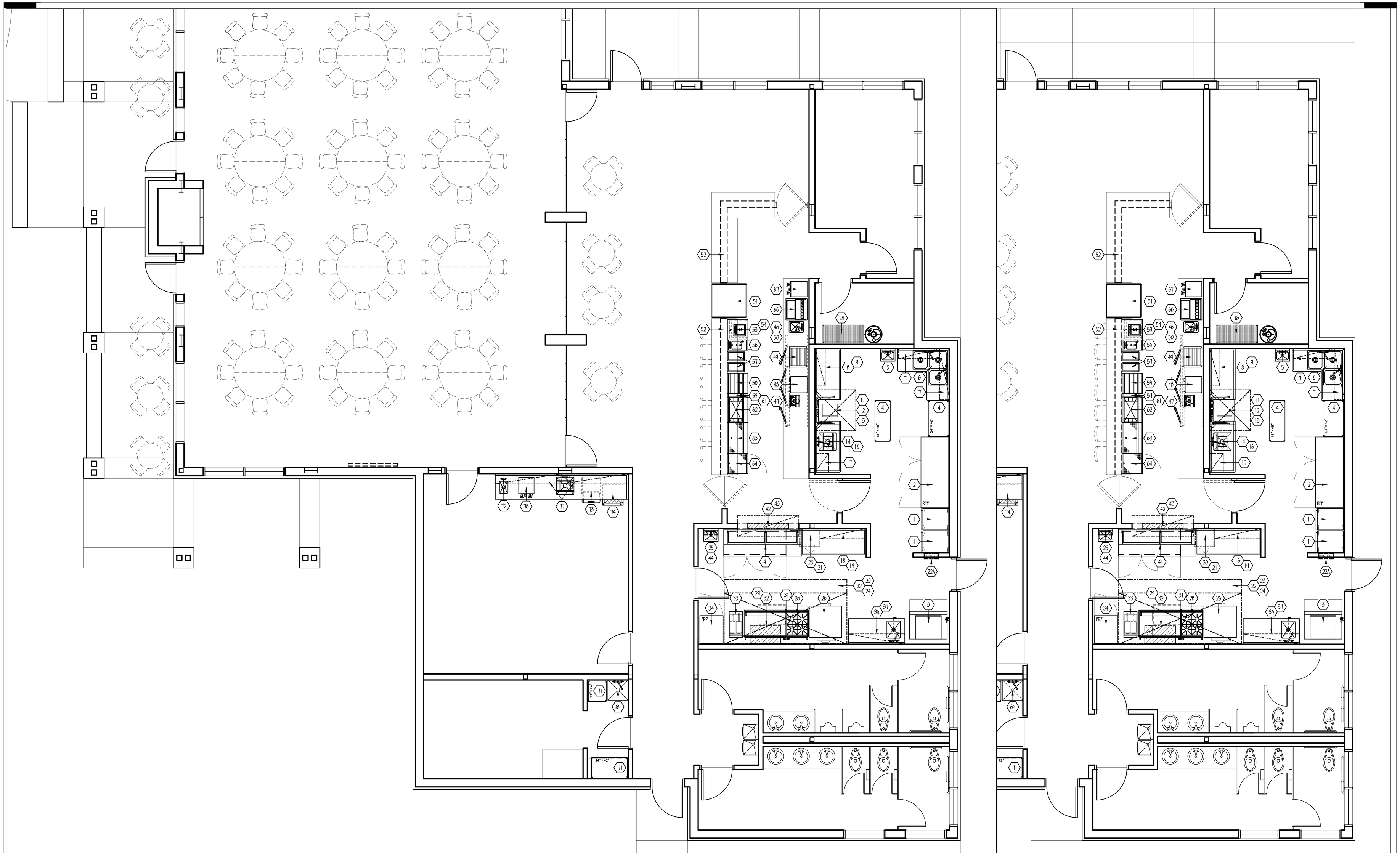

Comm. No.	Civil Engineer & Landscape Architect	Structural Engineer	Mechanical and Electrical Engineers	Foodservice Designer	Owner	I hereby certify that this drawing was prepared by me or under my direct supervision and that I am a duly licensed architect under the laws of the State of Minnesota.	Drawing No.
1758	SRF Consulting Group, Inc.	Mattson Macdonald Young structural engineers Bassett Creek Business Center 901 North 3rd Street, Suite 100 Minneapolis, MN 55401 612-827-7825 voice 612-827-0805 fax	emanuelson-podas consulting engineers 10401 Bren Road East Minnetonka, MN 55343 ph: 952-930-0050 fax: 952-930-0777 www.epinc.net	premier Exceptional Design ■ Legendary Results 7120 Northland Terrace, Minneapolis, MN 55428 ph: 763-544-8800 • fax: 763-544-7949 premiereq.com	City of Roseville Project Cedarholm Community Building Title Foodservice Fixture Plan	By: Title: Architect Date: Registration Number:	fs1.0

ISSUE DATE
05/31/2017 – DESIGN DEVELOPMENT SET
07/10/2017 – BID SET

HAGEN, CHRISTENSEN & McILWAIN
ARCHITECTS
4201 CEDAR AVENUE SO. • MINNEAPOLIS, MN 55407
TEL. (612)904-1932 • FAX (612)904-7366

DATE:6/29/2017 1:55 PM BY:GC STYLE:GC LOCATION: V:\2017\CEDARHOLM COMM CENTER - 17-192\17-192 G-1.dwg

E Q U I P M E N T S C H E D U L E

ITEM NO	QTY	EQUIPMENT	SUPPLIED BY	EQUIPMENT REMARKS	VOLTS	PHASE	KW	AMPS	HP	DIRECT PLUG	NEMA	ELECTRICAL AFF (IN)	ELECTRICAL REMARKS	DIRECT DRAIN SIZE (IN)	DIRECT-DRAIN AFF (IN)	INDIR DRAIN SIZE (IN)	INDIRECT-DRAIN AFF (IN)	HOT WATER SIZE (IN)	HOT WATER GPM	HOT-WATER AFF (IN)	COLD WATER SIZE (IN)	COLD-WATER AFF (IN)	GAS SIZE (IN)	MBTUH	GAS AFF (IN)	PLUMBING REMARKS	HVAC MAKE-UP DUCT SIZE (IN)	HVAC MAKE-UP CFM	HVAC MAKE-UP SPWG	HVAC EXHAUST DUCT SIZE (IN)	HVAC EXHAUST CFM	HVAC EXHAUST SPWG	HVAC REMARKS
1	2	CABINET, HOLDING/PROOFING	PREMIER		120			16.7		X	5-20P	18"																					
2	1	REFRIGERATOR, REACH-IN	PREMIER		120	1		6.5		X	5-15P	80"																					
3	1	ICE MAKER W/ BIN	PREMIER	WITH WATER FILTER	240	1		10.8		X		72"				2) 3/4"	RFD				1/2"	84"				NOTE MC; PC TO RUN IW'S TO FD AS REQUIRED							
4	2	SHELVING UNIT	PREMIER																														
5	1	HAND SINK	PREMIER											1-1/2"	21"			1/2"		25"	1/2"	25"				PC TO INSTALL SINK, RUN WATER TO FAUCET, WASTE TO SINK AS REQUIRED							
6	1	3-COMPARTMENT SINK	PREMIER											3) 1-1/2"	15"			2) 1/2"		18"	2) 1/2"	18"				PC TO RUN WATER TO FAUCETS, WASTE TO SINKS							
7	2	WALL SHELF	PREMIER																														
8	1	CLEAN DISHTABLE	PREMIER																														
9	2	WALL SHELF	PREMIER																														
10	-	SPARE NO.	-																														
11	1	CONDENSATE HOOD	PREMIER	RECEIVING & INSTALLATION BY GC									SEE NOTE EG & MANUFACTURER'S SHOP DRAWINGS																	10" DIA.	800	.195"	SEE NOTE EG & MANUFACTURER'S SHOP DRAWINGS
12	1	EXHAUST FAN	PREMIER		120	1		6.0		X		NOTE	VERIFY LOCATION WITH ARCHITECT; EC TO INTERCONNECT TO DISHMACHINE AS REQUIRED																				
13	1	WAREWASHER, DOOR-TYPE	PREMIER	HIGH TEMP W/ BOOSTER	240	1	14.6	83.6	3/4	X		62"	EC TO RUN TO UNIT AS REQ'D	2"	6"			3/4"	52.2	62"						NOTE MD, ME, MF; PC TO RUN WATER AND WASTE TO DISHMACHINE/BOOSTER AS REQ'D							
14	1	SOILED DISHTABLE	PREMIER	WITH PRE-RINSE FAUCET														1/2"		18"	3/4"	18"				PC TO RUN WATER TO FAUCET & TEE CW TO DISPOSER (#16) AS REQ'D.							
15	-	SPARE NO.	-																														
16	1	DISPOSER, GARBAGE - 2 H.P.	PREMIER		120/240	1		17.4	2.0	X		24"	PC RUN TO MANUAL-REVERSING SW - SEE NOTE EC	2"	10"						1/2"	TEE				SEE NOTE MA, MB & DETAIL - RUN WATER & WASTE TO DISPOSER AS REQ'D							
17	1	DISHTABLE SORTING SHELF	PREMIER																														
18	1	WORK TABLE	PREMIER		120			20C		X		48"	EC TO PROVIDE CONVENIENCE DR ABOVE COUNTER WHERE SHOWN																				
19	1	WALL SHELF	PREMIER																														
20	1	OVEN, MICROWAVE	PREMIER		120	1	1.6	13.0		X	5-15	72"																					
21	1	MICROWAVE SHELF	PREMIER																														
22	1	EXHAUST HOOD WITH MAKE-UP PLENUM	PREMIER	RECEIVING & INSTALLATION BY GC	120	1		20C		X		120"/48"	FOR LIGHTS - SEE NOTE EH & MANUFACTURER'S SHOP DRAWINGS														TBD	TBD	TBD	TBD	TBD	TBD	RECEIVING & INSTALLATION BY GC - SEE NOTE EH & MANUFACTURER'S SHOP DRAWINGS
22A	1	EXHAUST HOOD CONTROL PANEL	PREMIER		120	1		15C		X		NOTE	EC TO WIRE FROM JB TO CONTROL (VFY. HEIGHT), MUA, EXHAUST FAN, FIRE SUPPRESSION, DUCT SENSORS & THERMOSTAT AS REQUIRED; SEE MANUF. SHOP DRAWINGS																				
23	1	EXHAUST FAN	PREMIER		TBD	1		TBD		X		NOTE	VERIFY LOCATION WITH ARCHITECT																				
24	1	MAKE UP AIR	PREMIER		TBD	1		TBD		X		NOTE	VERIFY LOCATION WITH ARCHITECT										TBD	TBD	NOTE	VERIFY LOCATION WITH ARCHITECT							
25	1	FIRE PROTECTION SYSTEM - WET CHEMICAL TYPE	PREMIER		120	1		20C		X		CLG.	SEE FIRE NOTES, DETAIL & MANUFACTURER'S SHOP DRAWINGS																				
26	1	OVEN, CONVECTION, GAS - DOUBLE-DECK	PREMIER		2) 120	1		6.0	1/3	X	5-15P	24"/48"	NOTE EJ. 6 FOOT CORD W/PLUG PROVIDED - ELECTRICAL PER SECTION, PROVIDE 2 DRS										3/4"	2) 50	18"	NOTE MG; PC TO FIELD MANIFOLD; NATURAL GAS 7" W.C.							
27	-	SPARE NO.	-																														
28	1	HOT PLATE, COUNTER TOP	PREMIER																				3/4"	132	18"	SEE NOTE MG. NATURAL GAS @ 4.0" W.C.							
29	1	GRIDDLE, GAS	PREMIER																				3/4"	120	18"	NOTE MG; 7" W.C. - NAT. GAS							
30	-	SPARE NO.	-																														
31	1	REFRIGERATOR, SHORTY EQUIPMENT STAND	PREMIER	SELF-CONTAINED REFRIGERATION	120	1		4.8	1/4	X	5-15P	24"	NOTE EJ - 8''' CORD W/PLUG PROVIDED																				
32	1	CHEESEMELTER	PREMIER	WALL-MOUNTED																			1/2"	40	76"	4" W.C. NAT GAS - PC TO HARD-PIPE AS REQ'D.							
33	1	FRYER, DEEP FAT, GAS	PREMIER		120	1		20C		X		24"	NOTE EJ; EC TO PROVIDE CONV. DR IN CASE OWNER USES FILTER - FRYER REQUIRES NO ELEC.										3/4"	110	18"	SEE NOTE MG & DETAIL RI-1000. NAT. GAS. FURNISH & INSTALL REGULATOR TO PROVIDE 4" W.C. AT BURNER MANIFOLD.							
34	1	FREEZER, REACH-IN	PREMIER		120	1		7.2		X	5-15P	82"																					
35	-	SPARE NO.	-																														
36	1	WORKTABLE WITH SINK	PREMIER		120	1		20C		X		48"	EC TO PROVIDE CONVENIENCE DR ABOVE COUNTER WHERE SHOWN	2"	15"			1/2"		18"	1/2"	18"				PC TO RUN WATER TO FAUCET & WASTE TO SINK AS REQUIRED							
37	4	WALL SHELF	PREMIER																														
38	-	SPARE NO.	-																														
39	-	SPARE NO.	-																														
40	-	SPARE NO.	-																														
41	1	REFRIGERATED PREP. TABLE - 91"	PREMIER	SELF-CONTAINED REFRIGERATION	120	1		6.5	1/2	X	5-20P	18"	8' CORD W/ PLUG PROVIDED																				
42	1	DOUBLE S/ST PASS SHELF	PREMIER																														
43	1	HEAT LAMP	PREMIER		120	1	1.1	9.2		X		64"	EC TO WIRE FROM JB TO CONTROL AS REQUIRED																				
44	1	HAND SINK	PREMIER											1-1/2"	21"			1/2"		25"	1/2"	25"				PC TO INSTALL SINK, RUN WATER TO FAUCET, WASTE TO SINK AS REQUIRED							
45	-	SPARE NO.	-																														
46	1	BACK COUNTER	OTHERS (G.C.)		120	1		20C		X		54"	EC TO PROVIDE CONVENIENCE DR'S ABOVE COUNTER WHERE SHOWN																				
47	1	BACK BAR COOLER/BEER DISPENSER	PREMIER	SELF-CONTAINED REFRIGERATION	120	1		5.7	1/3	X	5-15P	12"	6 FOOT CORD W/ PLUG PROVIDED			3/4"	RFD									PC TO RUN IW TO FD							
48	1	DISPLAY CASE, HEATED	PREMIER		120	1	1.4	11.6		X	5-15P	54"																					
49	1	HOT DOG GRILL	PREMIER		120	1	1.2	10.0		X	5-15P	54"																					
50	1	DROP-IN DUMP SINK	PREMIER											1-1/2"	15"			1/2"		18"	1/2"	18"				PC TO RUN WATER TO FAUCET & WASTE TO SINK AS REQUIRED							
51	1	COMBO NON-REFRIGERATED/REFRIGERATED SERVICE CASE	PREMIER		120	1		12.0		X	5-15P	12"																					
52	1	BAR TOP	OTHERS																														
53	1	UNDERBAR CASH STAND	PREMIER																														
54	1	POS MACHINE	OWNER'S VENDOR		120	1		3.0		X		18"	SEE NOTE EL & EM - EC TO PROVIDE SYSTEM SERVICES AS REQ'D																				
55	-	SPARE NO.	-																														
56	1	UNDERBAR HANDSINK	PREMIER											1-1/2"	12"			1/2"		12"	1/2"	12"				PC TO RUN WATER TO FAUCET, WASTE TO SINK AS REQ'D.							
57	2	SLIM JIM	OTHERS		120	1		20C		X		24"	EC TO PROVIDE DR'S FOR CONVENIENCE & UNDERBAR LIGHTING WHERE SHOWN																				
58	1	UNDERBAR LIQUOR DISPLAY - 24"	PREMIER																														
59	1	SODA CHASE & GUN RACK	PREMIER													1/2"	RFD									PC TO RUN IW TO FD, SLEEVE FOR BEVERAGE LINES BY PC, COORD W/SODA VENDOR							
60	-	SPARE NO.	-																														
61	1	SODA GUN	OWNER'S VENDOR		120	1		20C		X		12"	FOR CARBONATOR AT BAR, IF REQ'D - VERIFY WITH OWNER'S VENDOR								1/2"	12"				FOR CARBONATOR AT BAR, IF REQ'D - VERIFY WITH OWNER'S VENDOR							
62	1	UNDERBAR ICE CHEST	PREMIER	WITH SPEEDRAIL												3/4"	RFD									PC TO RUN IW TO FD							
63	1	DRAINBOARD	PREMIER	WITH SPEEDRAIL												1-1/2"	RFD									PC TO RUN IW TO FD							
64	1	CABINET DRAINBOARD	PREMIER													1-1/2"	RFD									PC TO RUN IW TO FD							
65	-	SPARE NO.	-																														
66	1	SODA & ICE DISPENSER	OWNER'S VENDOR		120	1		20 C		X	5-20P	10/48"	PROVIDE SERVICE ABOVE & BELOW COUNTER - VERIFY ALL REQ'MENTS WITH OWNER'S VENDOR			2) 3/4"	RFD				1/2"	10/48"				PROVIDE SERVICE ABOVE & BELOW COUNTER - VERIFY ALL REQ'MENTS WITH OWNER'S VENDOR - SLEEVES FOR SODA LINES AS SHOWN							
67	1	COFFEE BREWER	OWNER'S VENDOR		120/240	1	6.0	28.8		X		48"	REQUIRES 3-WIRE PLUS GROUND - VERIFY ALL REQ'MENTS WITH OWNER'S VENDOR								1/2"	48"				VERIFY ALL REQ'MENTS WITH OWNER'S VENDOR							
68	-	SPARE NO.	-																														
69	1	MOP SINK WITH FAUCET	OTHERS											2"	0"			1/2"		30"	1/2"	30"				SUPPLIED AND INSTALLED BY PLUMBING CONTRACTOR - VERIFY ALL REQUIREMENTS							
70	-	SPARE NO.	-																														
71	2	SHELVING UNIT	PREMIER																														
72	1	BEVERAGE COUNTER	PREMIER	WITH HAND SINK & GLASS FILLER	120	1		20C		X		48"	EC TO PROVIDE CONVENIENCE DR'S ABOVE COUNTER WHERE SHOWN	1-1/2" & 2"	15"			1/2"		18"	2) 1/2"	18"				PC TO RUN WATER TO FAUCETS & WASTE TO SINKS AS REQUIRED							
73	1	ICE TRANSPORT CART	PREMIER																														
74	5	DOLLY, DISHRACK	PREMIER																														
75	-	SPARE NO.	-																														
76	1	COFFEE BREWER	OWNER'S VENDOR		120/240	1	6.0	28.8		X		48"	REQUIRES 3-WIRE PLUS GROUND - VERIFY ALL REQ'MENTS WITH OWNER'S VENDOR								1/2"	48"				VERIFY ALL REQ'MENTS WITH OWNER'S VENDOR							
77	4	WALL SHELF	PREMIER																														
78	1	SODA SYSTEM	OWNER'S VENDOR		2) 120	1		20C		X		84"	EC TO PROVIDE (2) QUAD-PLEX OUTLETS FOR CARBONATORS; VERIFY REQUIREMENTS W/OWNER'S VENDOR								1/2"	72"				VERIFY REQUIREMENTS W/OWNER'S VENDOR - SLEEVES FOR SODA LINES AS REQUIRED BY GC, COORD. WITH SODA VENDOR							

Comm. No.
1758

ISSUE DATE
05/31/2017 - DESIGN DEVELOPMENT SET
07/10/2017 - BID SET

Civil Engineer & Landscape Architect
SRF Consulting Group, Inc.

Structural Engineer
Mattson Macdonald Young structural engineers
Bassett Creek Business Center
901 North 3rd Street, Suite 100
Minneapolis, MN 55401
612-827-7825 voice
612-827-0805 fax

Mechanical and Electrical Engineers
emanuelson-podas consulting engineers
10401 Bren Road East
Minnetonka, MN 55343
ph: 952-930-0050
fax: 952-930-0777
www.epinc.net

Foodservice Designer
premier
Exceptional Design ■ Legendary Results
7120 Northland Terrace, Minneapolis, MN 55428
ph: 763-544-8800 ■ fax: 763-544-7949
premiereq.com

Owner
City of Roseville
Project
Cedarholm Community Building
Title
Foodservice Rough-In Schedule

I hereby certify that this drawing was prepared by me or under my direct supervision and that I am a duly licensed architect under the laws of the State of Minnesota.

By:

Title: Architect Date:

Registration Number:

Drawing No.
fs2.0

HAGEN, CHRISTENSEN & McILWAIN
ARCHITECTS
4201 CEDAR AVENUE SO. • MINNEAPOLIS, MN 55407
TEL (612)904-1332 • FAX (612)904-7366

DATE:6/29/2017 1:36 PM BY:RC drawing LOCATION: Y:\2017\CEDARHOLM COMM CENTER - 17-142\17-142 FS-1.dwg

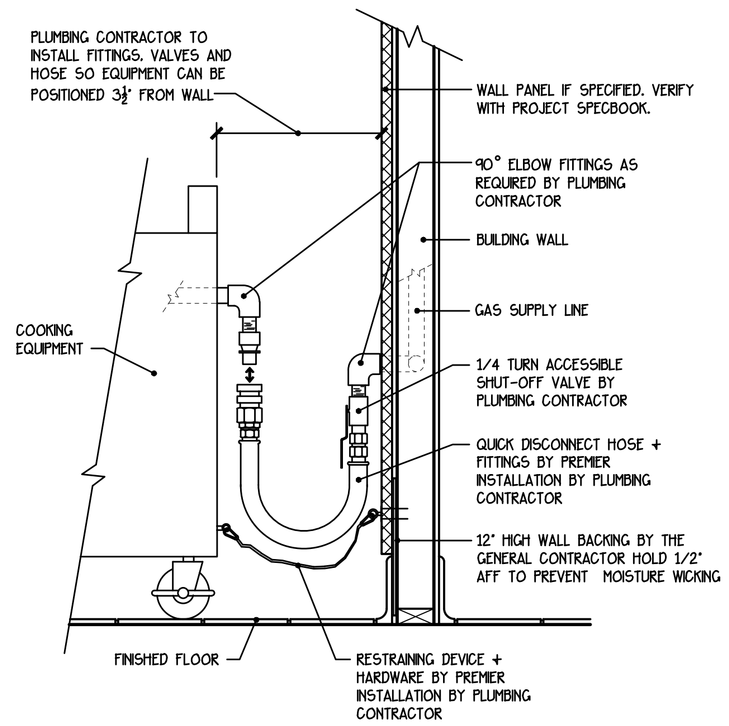

RI-1000 / KS-1 QUICK DISCONNECT DETAIL

N.T.S.

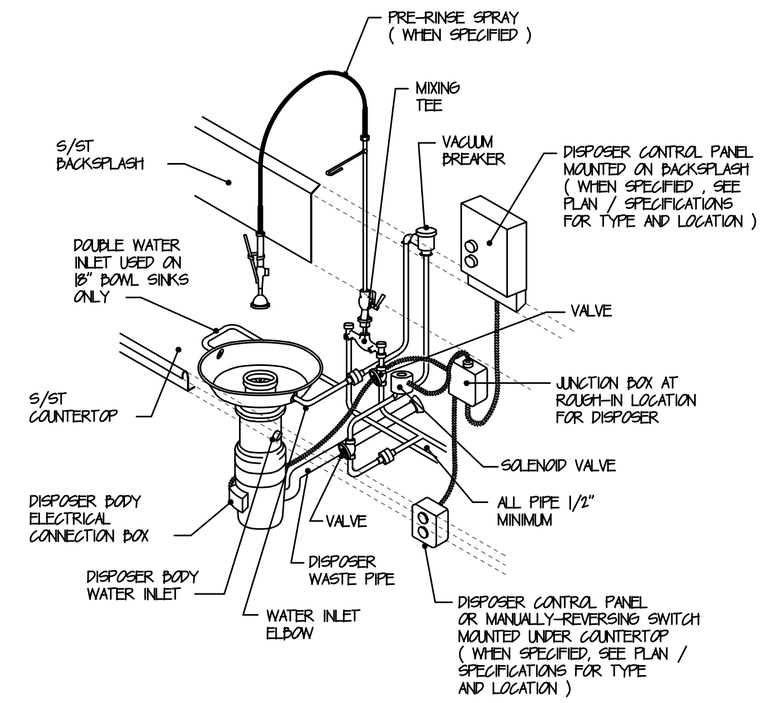

RI-1010 / KS-1 DISPOSER DETAIL

N.T.S.

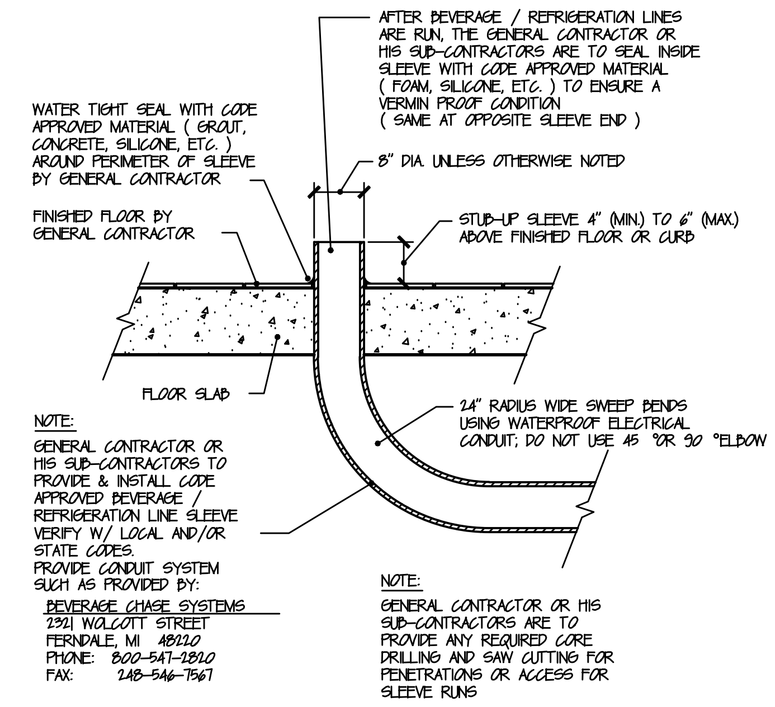

NOTE:
GENERAL CONTRACTOR OR HIS SUB-CONTRACTORS TO PROVIDE & INSTALL CODE APPROVED BEVERAGE / REFRIGERATION LINE SLEEVE VERIFY W/ LOCAL AND/OR STATE CODES.
PROVIDE CONDUIT SYSTEM SUCH AS PROVIDED BY:
BEVERAGE CHASE SYSTEMS
2321 WALCOTT STREET
FERNDALE, MI 48220
PHONE: 800-547-2810
FAX: 248-546-7567

NOTE:
GENERAL CONTRACTOR OR HIS SUB-CONTRACTORS ARE TO PROVIDE ANY REQUIRED CORE DRILLING AND SAW CUTTING FOR PENETRATIONS OR ACCESS FOR SLEEVE RUNS

GENERAL BEVERAGE / REFRIGERATION LINE NOTE:
GENERAL CONTRACTOR TO VERIFY AND COORDINATE WITH ALL BEV. SYSTEM / REFRIG. CONTRACTORS FOR ALL BEV. SYSTEM / REFRIG. INSTALLATIONS AND THEIR FINAL HOOK-UPS. ALL WORK TO CONFORM TO ALL PREVAILING LOCAL AND/OR STATE CODES.

RI-1200 / KS-1 BEVERAGE-REFRIGERATION LINE SLEEVE FLOOR PENETRATION DETAIL

N.T.S.

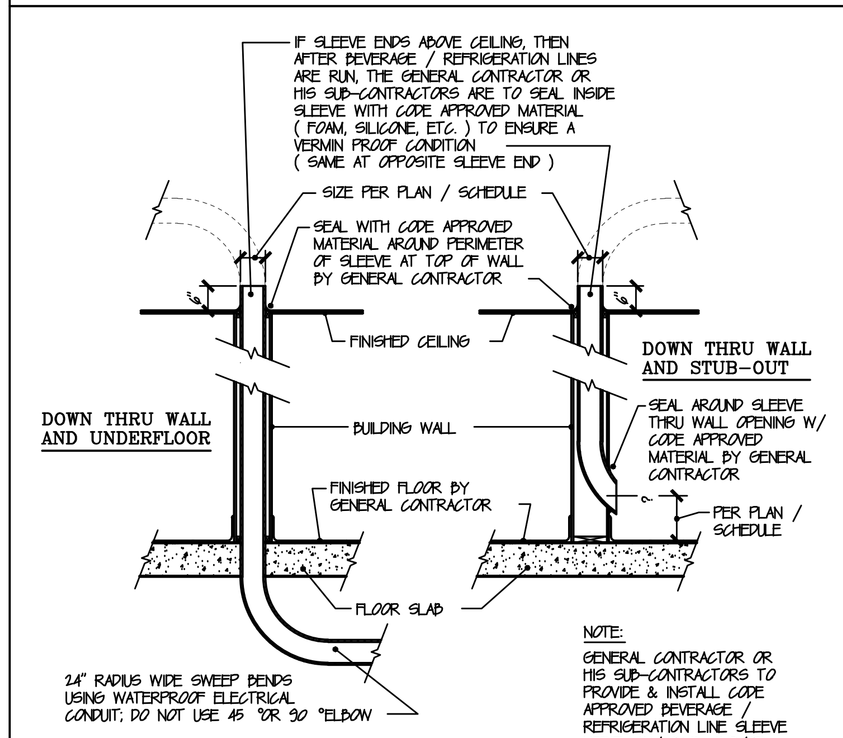

GENERAL BEVERAGE / REFRIGERATION LINE NOTE:
GENERAL CONTRACTOR TO VERIFY AND COORDINATE WITH ALL BEV. SYSTEM / REFRIG. CONTRACTORS FOR ALL BEV. SYSTEM / REFRIG. INSTALLATIONS AND THEIR FINAL HOOK-UPS. ALL WORK TO CONFORM TO ALL PREVAILING LOCAL AND/OR STATE CODES.

NOTE:
GENERAL CONTRACTOR OR HIS SUB-CONTRACTORS ARE TO PROVIDE ANY REQUIRED CORE DRILLING ANS SAW CUTTING FOR PENETRATIONS OR ACCESS FOR SLEEVE RUNS

NOTE:
GENERAL CONTRACTOR OR HIS SUB-CONTRACTORS TO PROVIDE & INSTALL CODE APPROVED BEVERAGE / REFRIGERATION LINE SLEEVE VERIFY W/LOCAL AND/OR STATE CODES
PROVIDE CONDUIT SYSTEM SUCH AS PROVIDED BY:
BEVERAGE CHASE SYSTEMS
2321 WALCOTT STREET
FERNDALE, MI 48220
PHONE: 800-547-2810
FAX: 248-546-7567

RI-1210 / KS-1 BEVERAGE-REFRIGERATION LINE SLEEVE THRU WALL DETAIL

N.T.S.

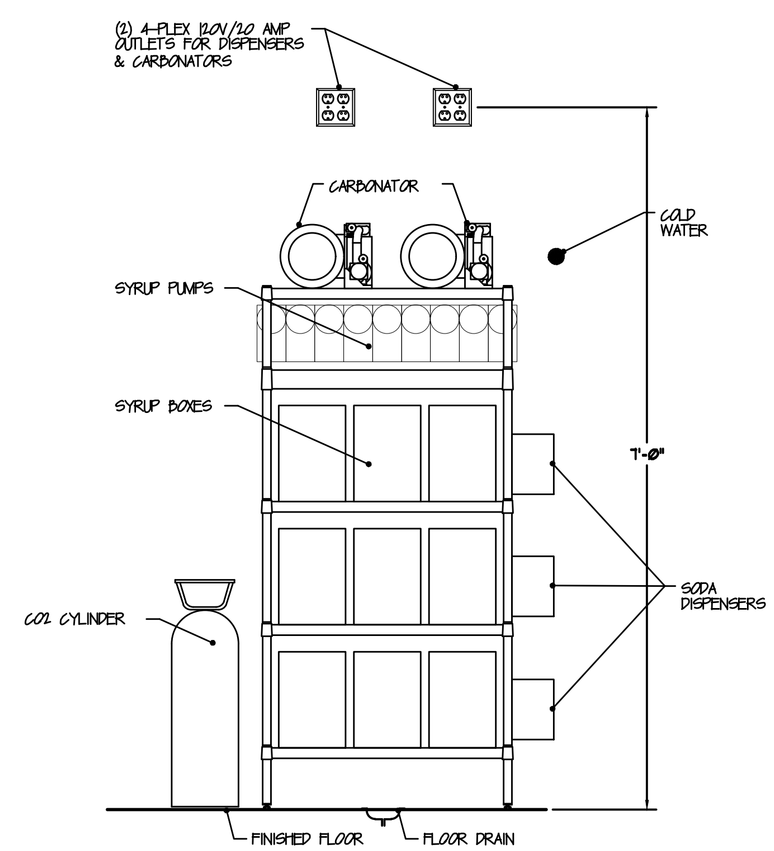

RI-1210 / KS-1 BAG-N-BOX ELEVATION

N.T.S.

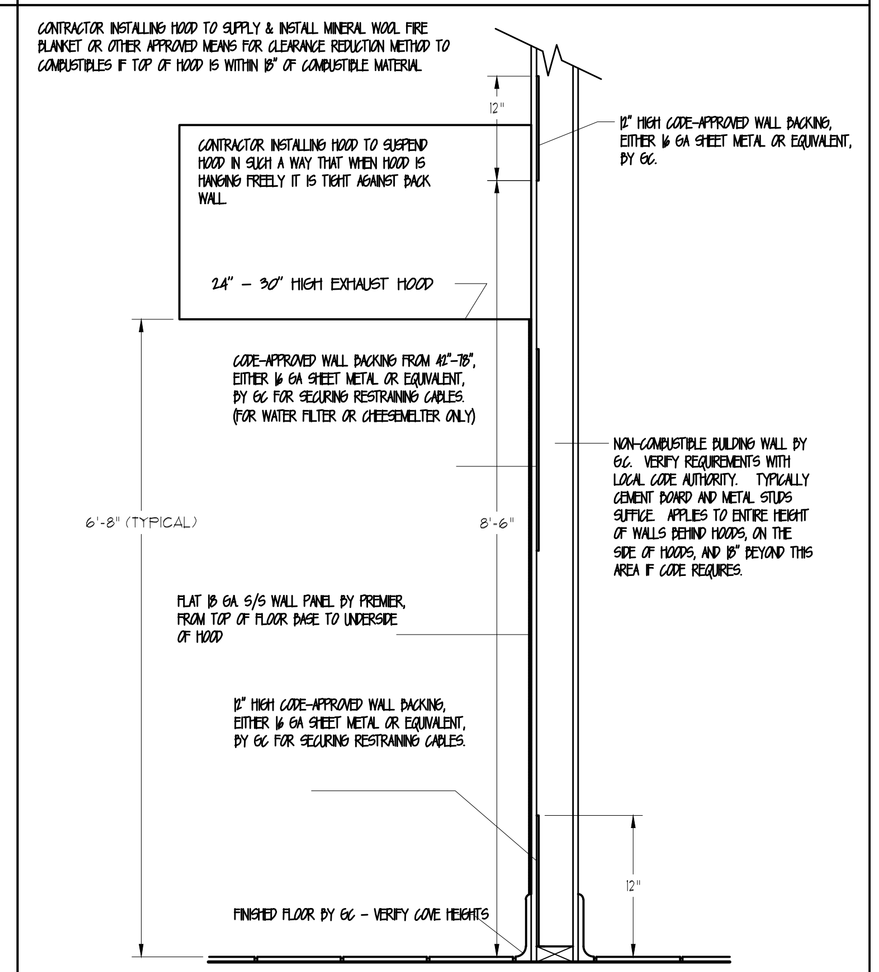

SC-1063 / KS-1 EXHAUST HOOD WALL DETAIL

@ COOKING WALLS W/ 24" - 30" HIGH HOOD & 9'-0" CEILING HEIGHT

N.T.S.

Comm. No.	Civil Engineer & Landscape Architect	Structural Engineer	Mechanical and Electrical Engineers	Foodservice Designer	Owner	I hereby certify that this drawing was prepared by me or under my direct supervision and that I am a duly licensed architect under the laws of the State of Minnesota.	Drawing No.
1758	SRF Consulting Group, Inc.	Mattson Macdonald Young structural engineers, Bassett Creek Business Center, 901 North 3rd Street, Suite 100, Minneapolis, MN 55401, 612-827-7825 voice, 612-827-0805 fax	emanuelson-podas consulting engineers, 10401 Bren Road East, Minnetonka, MN 55343, ph: 952-930-0050, fax: 952-930-0777, www.epinc.net	premier, Exceptional Design ■ Legendary Results, 7120 Northland Terrace, Minneapolis, MN 55428, ph: 763-544-8800 ■ fax: 763-544-7949, premierfoq.com	City of Roseville	By:	fs2.1
ISSUE DATE: 05/31/2017 - DESIGN DEVELOPMENT SET; 07/10/2017 - BID SET					Project: Cedarholm Community Building	Title: Architect Date:	
					Title: Foodservice Details	Registration Number:	

HAGEN, CHRISTENSEN & McILWAIN ARCHITECTS
4201 CEDAR AVENUE SO. • MINNEAPOLIS, MN 55407
TEL (612)904-1332 • FAX (612)904-7388

DATE:6/29/2017 1:06 PM BY:HC OFFICE:MN LOCATION: H:\2017\CEDARHOLM COMM CENTER - 17-1758\17-1758 KS-1.dwg

REQUEST FOR BIDS

Cederholm Community Building
City of Roseville
Roseville Project Number:
eBid Doc#:
July 11, 2017

DRAFT

2.2 DETAILED SCOPE OF WORK

The anticipated scope of work for the Cederholm Community Building includes, generally:

- construction of one Community Building;
- construction of one golf Cart Storage Building;
- site improvements related to building construction;
- other constructed site improvements;
- demolition and removal of existing clubhouse building;
- construction of new parking facilities
- restoration of disturbed areas.

As a part of this proposal, the following general description of work shall be accomplished:

- Cederholm Community Building — *remove existing clubhouse facility; relocate, construct, or upgrade site utilities; construct community building; construct parking area; construct site improvements related to the community building; restore disturbed areas*

- *Cart Storage Building* — *Construct new cart storage building*

Respondents shall complete Attachment L (Schedule of Unit Price Values) as a part of their proposal. The Schedule of Unit Price Values will address modifications necessitated by conditions identified in the field during the progress of the work. It is expected that this schedule will be directed to modifications beyond the work described in the plans and identified in any lump sum item in Attachment D (Cost Proposal Form).In addition, the proposer shall accomplish the following tasks as a part of the work of this proposal package:

- Highlight, as a part of the proposal, potential modifications that result in more efficient, enduring, and cost-effective construction or constructed result, providing that the core program requirements, to the degree they are evident in the drawings, are maintained;
- Prepare and maintain a detailed schedule of construction activities and milestones demonstrating completion of projects by dates defined in this request for proposals; identify all activities of the City of Roseville necessary to maintain adherence to the proposer's schedule; identify points where risks may impact project schedule;
- Identify and construct all improvements that result in a complete and ready-to-occupy Community Building and Cart Building;
- Provide temporary facilities, particularly electrical service (for lighting systems) and water service (for irrigation systems), if those systems exist at the site;
- Accommodate, to the greatest degree possible, golf events and programs planned to occur at the golf course (per ATTACHMENT ?); if interruption of programs must occur, the contractor shall identify anticipated interruption dates in a detailed schedule provided to the City of Roseville during the contract clarification stage;
- Provide all necessary protections for the public in the course when undergoing construction including, but not limited to, fencing, barricades, notices and warnings, and other methods of securing the construction site from public access and instructing the public in use of the course during construction activities;
- Provide any necessary traffic control during construction activities, including activities that might require a closure of a public street or right-of-way;

DRAFT

- Maintain sufficient supervisory personnel to maintain progress on all portions of this proposal package toward milestone and completion dates identified in the proposer's project schedule;
- Obtain all necessary permits and approvals necessary to construct the improvements;
- Provide training to City of Roseville staff in the operation of equipment and systems and provide operations and equipment manuals for all building and site systems, including all as-built documents; and
- Perform other tasks typical to this type of construction project and necessary for satisfactory completion and acceptance of the constructed result.
- The City has budgeted $?,???,??? for the work anticipated in this RFP.

2.3 ALTERNATES AND CONSIDERATION OF OTHER MATERIALS AND METHODS

In this Request for Bids, the City has identified a series of alternate price quotes that will be considered in the evaluation of proposals submitted. Those alternate quotes are listed in the Proposal Form (Attachment D/Quest CDN) and are more fully described in the project specifications and indicated in the drawings.

2.4 DELIVERABLES

The vendor/s is expected to deliver fully operational "turnkey" park improvements per standards and schedule as outlined above and in the project documents. The contractor will also provide the following upon completion of the project

1. 3 project manuals
2. Electronic "As Built" drawings
3. Warranty and contact information for all improvements
4. Training of City staff regarding proper inspection, maintenance and repair standards for all improvements

Project Schedule
Once the contractor has been selected, the actual construction schedule will be solidified. Contractor shall provide a detailed work plan that addresses all major tasks, risks and milestones to be accomplished throughout the process.

Task Timeframe
It is expected that upon a contract award the Contractor will begin work immediately in a manner that is consistent with the final work plan developed in cooperation with and approved by the City of Roseville. The final work plan will include detailed methods and milestones, incorporate expectations described in the RFP, potential risk mitigation methods, and the scope of work. The City of Roseville would like the improvements included in this Proposal completed as soon as possible and will give special consideration to firms with the ability to complete this project within a compressed time schedule. All work must be completed no later than ???, 2018 other than contractor furnished maintenance activities. Construction schedule must be coordinated with attached schedule of existing Parks and Recreation activities.

It is in the best interest of the City of Roseville to complete the work of this RFP in the most expeditious manner possible that allows the improvements to be completed for the greatest benefit to the Community

DRAFT

3. BID PROPOSAL AND BID PROPOSAL FORM

3.1 The total of all prices will be determined as the sum of the products of the estimated quantity of each item and the unit price Bid for the item. If the bid form is separated into different sections and/or "add alternates", the Bidder must show a unit price for all bid items in all sections and "add alternates."

3.2 Discrepancies between the multiplication of units of work and unit prices will be resolved in favor of unit prices. Discrepancies between the indicated sum of any column of figures and the correct sum thereof will be resolved in favor of the correct sum. Discrepancies between words and figures will be resolved in favor of words.

3.3 All blanks on the Bid Proposal Form must be completed.

3.4 Bids by partnerships must be executed in the partnership name and signed by a partner, whose title must appear under the signature and the official address of the partnership must be shown.

3.5 The address, telephone number and fax number, if any, for communications regarding the Bid must be shown.

4. SUBMITTAL OF BIDS

4.1 Bids shall be submitted at the time and place indicated in the Advertisement to Bid.

4.2 Each Bid must be submitted electronically through BidVAULT. Hard copies of bids shall not be accepted.

4.3 If you are unfamiliar with electronic bidding or you have questions about the process, reference the City of Roseville's website at http://www.cityofroseville.com/2950/Construction-Bidding. There you will find information about setting up an online account, submitting a bid, and more.

4.4 Bidding documents that must be completed and submitted as part of the bid are: Job References, Non-Collusion Declaration, Notice to Bidders form, and the Responsible Contractor Certificate. These documents must completed electronically through BidVAULT in order to submit a bid.

5. MODIFICATION AND WITHDRAWAL OF BIDS

5.1 Bids may be modified or withdrawn on BidVAULT at any time prior to the opening of Bids.

5.2 If, by the next working day at the same time of bid opening after Bids are opened, any Bidder files a duly signed, written notice with the Owner and promptly thereafter demonstrates to the reasonable satisfaction of the Owner that there was a material and substantial mistake in the preparation of its Bid, that Bidder may withdraw its Bid and the Bid security will be returned. Thereafter, that Bidder will be disqualified from further bidding on the Work to be provided under the Contract Documents.

5.3 Bids received prior to the time of opening will be securely kept, unopened. The officer whose duty it is to open them will decide when the specified time has arrived, and no Bid received thereafter will be considered.

6. OPENING OF BIDS

Bids will be opened and (unless obviously non-responsive) read aloud. An abstract of the amounts of the base Bids and major alternates (if any) will be made available to Bidders after the opening of Bids.

7. BIDS TO REMAIN SUBJECT TO ACCEPTANCE

All bids will remain subject to acceptance for ninety (90) days after the day of the Bid opening, but the Owner may, in its sole discretion, release any Bid and return the Bid security prior to that date.

DRAFT

8. SUPPLEMENTAL INFORMATION REQUEST

After the bids are open and prior to Notice of Award, in addition to information required by the supplementary conditions the Owner may request from any Bidder such information as Owner may deem necessary to evaluate the responsibility, qualifications and financial ability of the Bidder to perform the Work. Bidder shall, within seven days of receipt of request from Owner, provide the requested information in a form acceptable to Owner.

9. AWARD OF CONTRACT

9.1 The Owner reserves the right to reject any and all Bids, to waive any and all informalities not involving price, time or changes in the Work and to negotiate contract terms with the successful Bidder, and the right to disregard all nonconforming, non-responsive, unbalanced or conditional Bids. Also, the Owner reserves the right to reject the Bid of any Bidder if the Owner believes that it would not be in the best interest of the project to make an award to that Bidder, whether because the Bid is not responsive or the Bidder is unqualified or of doubtful financial ability or fails to meet any other pertinent standard or criteria established by the Owner. Discrepancies in the multiplication of units of work and unit prices will be resolved in favor of the unit prices. Discrepancies between the indicated sum of any column of figures and the correct sum thereof will be resolved in favor of the correct sum.

9.2 In evaluating Bids, the Owner will consider the qualifications of the Bidders, whether or not the Bids comply with the prescribed requirements, and such alternates, unit prices and other data, as may be requested in the bid form or prior to the Notice of Award.

9.3 The Owner may consider the qualifications and experience of Subcontractors, suppliers, and other persons and organizations proposed for those portions of the work as to which the identity of Subcontractors, suppliers, and other persons and organizations must be submitted as provided in the General Conditions. The Owner also may consider the operating costs, maintenance requirements, performance data and guarantees of major items of materials and equipment proposed for incorporation in the work when such data is required to be submitted prior to the Notice of Award.

9.4 The Owner may conduct such investigations as the Owner deems necessary to assist in the evaluation of any Bid and to establish the responsibility, qualifications and financial ability of Bidders, proposed Subcontractors, suppliers and other persons and organizations to perform and furnish the work in accordance with the Contract Documents to the Owner's satisfaction within the prescribed time.

9.5 If the Contract is to be awarded, it will be awarded to the lowest qualified, responsible, and responsive Bidder whose evaluation by the Owner indicates to the Owner that the award will be in the best interest of the project.

9.6 If the contract is to be awarded, the Owner will give the successful Bidder a Notice of Award within one hundred five (105) days after the day of the Bid opening.

9.7 The Owner reserves the right to cancel the award of any Contract at any time before the execution of said Contract by all parties without any liability against the Owner or its agents, officials, employees or consultants.

9.8 The Roseville City Council will consider award of bids for this project at their regular meeting on?? or as soon thereafter as possible.

10. CONTRACT SECURITY

The General Conditions and the Special Conditions set forth the Owner's requirements as to performance and payment bonds. When the successful Bidder delivers the executed Agreement to the Owner, it must be accompanied by the required performance and payment bonds.

DRAFT

11. SIGNING OF AGREEMENT

When the Owner gives a Notice of Award to the successful Bidder, it will be accompanied by the required number of unsigned counterparts of the Agreement with all other written Contract Documents attached. Within fifteen (15) days thereafter the Contractor shall sign and deliver the required number of counterparts of the Agreement and attached documents to the Owner with the required bonds and insurance certificates. Within fifteen (15) days thereafter the Owner shall deliver one (1) fully signed counterpart to the Contractor

DRAFT

HAGEN, CHRISTENSEN & MCILWAIN
ARCHITECTS

MEMORANDUM

To:	Roseville PRC	From:	Tim McILwain
		Date:	06/26/2017
		Comm. No:	1758
Subject:	Roseville Parks	Copies To:	File
	Cedarholm Community Building – Sustainable Design Features		

The design for the Cedarholm Community Building has the following sustainable design features and systems:

a. Civil / Site Design:

1. Best practices for storm water treatment & management.
2. Use of native plant species where practical.
3. Use of low water consumption plants where practical.

b. Architectural Design:

1. Use of regionally harvested / manufactured exterior materials (wood trim, stone veneer).
2. Use of durable exterior materials (stone and cement siding).
3. Use of Certified Sustainable Wood for framing and structure.
4. Required recycling of demolition materials
5. Required separation and recycling of construction waste
6. Building is prepped for solar array installation.
7. Window units are locally manufactured and maintain a Forestry Stewardship Certification (FSC), SCS Recycled Content Certification.
8. Materials such as wood substrates, paints and stains, finishes and fabrics will be low-emitting materials containing no volatile organic compounds.
9. Strategies will include utilizing local fabricators for millwork, signage, window systems, furniture fixtures and equipment and specifying construction materials that are manufactured within 250 miles of the site such as quartz countertops, wood veneer and trim, flooring, etc.
10. There will be an emphasis to specify materials with a high percentage of recycled content as well as bio-based materials for such elements as steel structure, ceramic tile, carpet, table tops and fixtures.
11. The Project will have acoustic materials to maintain background noise less than 70 Dba and reverberation times within acceptable ranges.
12. Specify Bird -Friendly Glass panels as a Project Alternate.

PH 612-904-1332 FAX 612-904-7366
4201 CEDAR AVENUE SOUTH | MINNEAPOLIS, MN 55407

c. Mechanical Design:

1. Low flow plumbing fixtures
2. High-efficiency Furnaces – 95% efficient
3. ECM Fan Motors on furnaces
4. New mechanical equipment including make-up air units, exhaust fans and VAV units will meet MN 2030 Energy Efficiency Guidelines and the hot water heaters and kitchen equipment will be Energy-Star, EPEA or Water Sense certified whenever possible. Cooling systems will have ozone safe refrigerants.
5. Heating and cooling systems will be controlled with a Building Automated System (B.A.S.) for better control, efficiency and monitoring.

d. Electrical Design:

1. The lighting for all general illumination will be color balanced LED fixtures on a programmable lighting control system that will provide for any daylight harvesting opportunities.
2. Access to natural light will be provided whenever possible.
3. Motion sensors and vacancy sensors for lighting auto-off
4. Electrical distribution system layout and the building's structure are prepared for future solar array installation.

To: Roseville City Council and City Manager Pat Trudgeon

From: Lonnie Brokke, Parks and Recreation Director

Subject: June 5, 2017, City Council Meeting Follow-up - Cedarholm Community Building

Date: June 9, 2017

At your Monday, June 5, 2017 City Council meeting, a question was raised about the consideration for a basement at the Cedarholm Community Building. As mentioned at the meeting; this was identified, explored and studied early in the process but ruled out due to the limited site access, practicality, usefulness, logistics, impact to the operations and cost.

The analysis included the following main points:

- The site access, building access, congestion and impact on the area would be a significant challenge because of the overall space in the area.
- If used for anything other than storage (public use) an elevator would be required at a significant cost.
- The projected cost was $75.00 to $125.00 per square foot, not including a human or freight elevator. Using the average of $100.00 per square foot, the estimated cost with a basement under the entire 5000 square feet would be $500,000.
- If the basement were smaller and under only a portion of the building, it is projected to increase in cost per square foot as it gets smaller.

The analysis by staff, architects and others concluded that it was more cost effective, practical and useful to have a standalone 700 sq. ft. cart storage area for 20 carts. The estimated cost for an enclosed siding and door structure for 20 carts is $67,000 vs. a fence and gate structure at $62,000. This area would be used for equipment storage in the off season, i.e. patio furniture, benches and equipment.

Thank you and if you have any further questions, please let me know.